W2D208-BA02-01

AC diagonal compact fan

sickled blades (S series)

ebm-papst Mulfingen GmbH & Co. KG
Bachmühle 2
74673 Mulfingen
Phone: +49 7938 81-0
Fax: +49 7938 81-110
www.ebmpapst.com
info1@de.ebmpapst.com

Nominal data

Type	**W2D208-BA02-01**
Motor	**M2D068-CF**

Phase		3~	3~	3~
Nominal voltage	[V]	400	400	400
Connection		Y	Y	Y
Frequency	[Hz]	50	60	60
Type of data definition		rfa	rfa	rfa
Valid for approval / standard		CE	CE	UL
Speed	[min^{-1}]	2740	3090	3090
Power input	[W]	60	80	80
Current draw	[A]	0,15	0.15	0.15
Min. back pressure	[Pa]	0	0	0
Max. back pressure	[Pa]	130	170	170
Max. ambient temperature	[°C]	70	70	70
Air flow	[m^3/h]	820	920	920
Back pressure	[Pa]	0	0	0
Sound pressure level	[dB(A)]	67	70	70

ml = max. load · me = max. efficiency · rfa = running at free air · cs = customer specs · cu = customer unit
Subject to alterations

AC diagonal compact fan

sickled blades (S series)

Technical features

Leackage current	< 0,75 mA
Size	208 mm
Operation mode	S1
Direction of rotation	Counter-clockwise, seen on rotor
Mounting position	Any
Electrical leads	Via terminal strips, integrated capacitor connected via terminal strips
Direction of air flow	"V"
Insulation class	"F"
Cable exit	Lateral
Condensate discharge holes	None
Bearing motor	Ball bearing
Mass	2.8 kg
Material of impeller	PA plastic
Material of wall ring	Die-cast aluminium, coated in black
Product conforming to standard	EN 60335-1
Surface of rotor	Coated in black
Number of blades	5
Type of protection	IP 44 - depending on position
Protection class	I
Max. permissible ambient motor temp. (transp./ storage)	+ 80 °C
Min. permissible ambient motor temp. (transp./storage)	- 40 °C
Approval	CCC; GOST; VDE

ebm-papst Mulfingen GmbH & Co. KG · Bachmühle 2 · 74673 Mulfingen · Phone: +49 7938 81-0 · Fax: +49 7938 81-110 · www.ebmpapst.com · info1@de.ebmpapst.com

AC diagonal compact fan

sickled blades (S series)

Product drawing

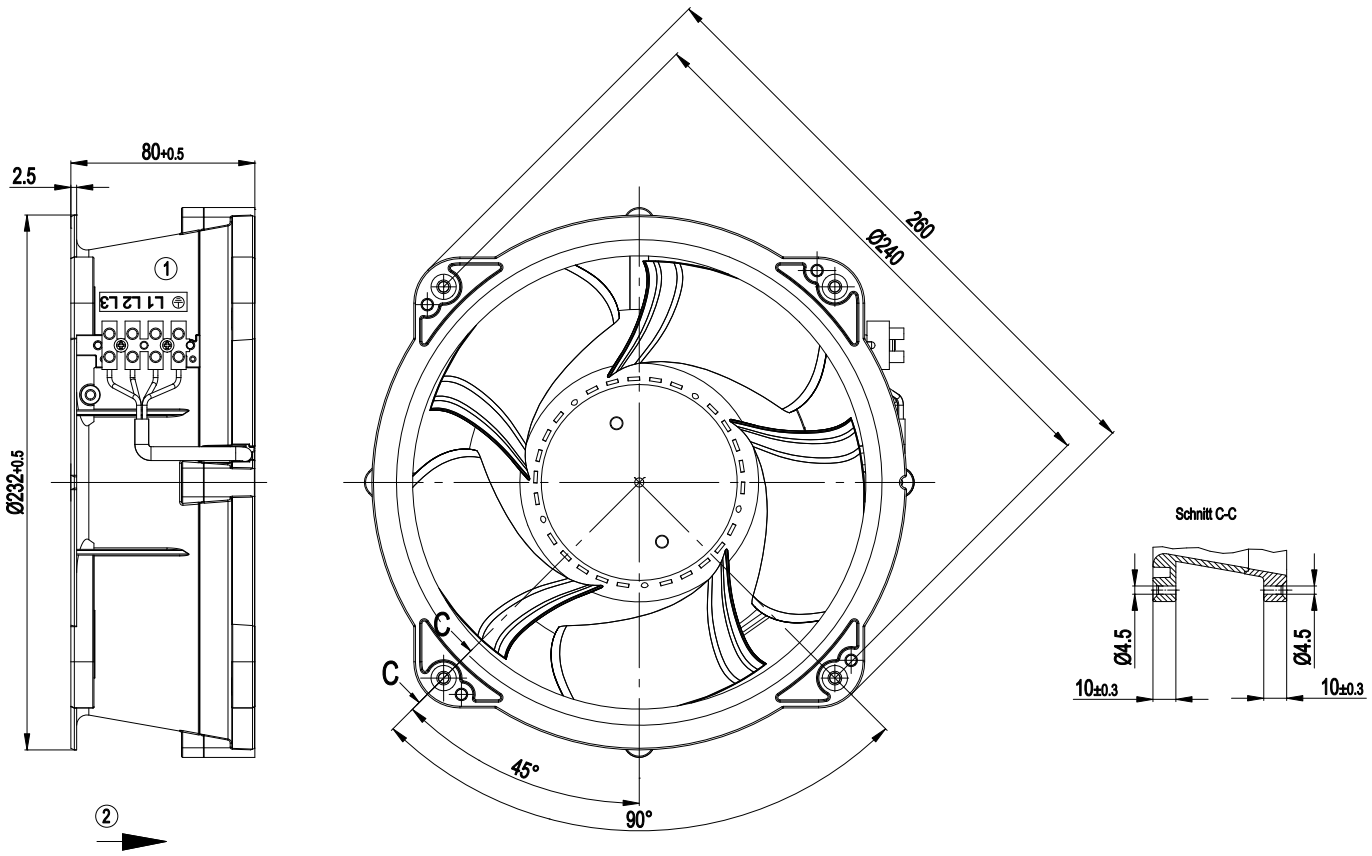

1	Terminal strip: 4 connections
2	Direction of air flow "V"

ebm-papst Mulfingen GmbH & Co. KG · Bachmühle 2 · 74673 Mulfingen · Phone: +49 7938 81-0 · Fax: +49 7938 81-110 · www.ebmpapst.com · info1@de.ebmpapst.com

AC diagonal compact fan

sickled blades (S series)

Connection screen

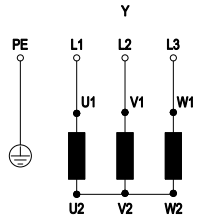

Changing the direction of rotation by reversing the two phases

PE	green/yellow	L1	black	L2	blue
L3	brown	Y	Star connection		

ebm-papst Mulfingen GmbH & Co. KG · Bachmühle 2 · 74673 Mulfingen · Phone: +49 7938 81-0 · Fax: +49 7938 81-110 · www.ebmpapst.com · info1@de.ebmpapst.com

AC diagonal compact fan

sickled blades (S series)

Charts: Air flow 60 Hz

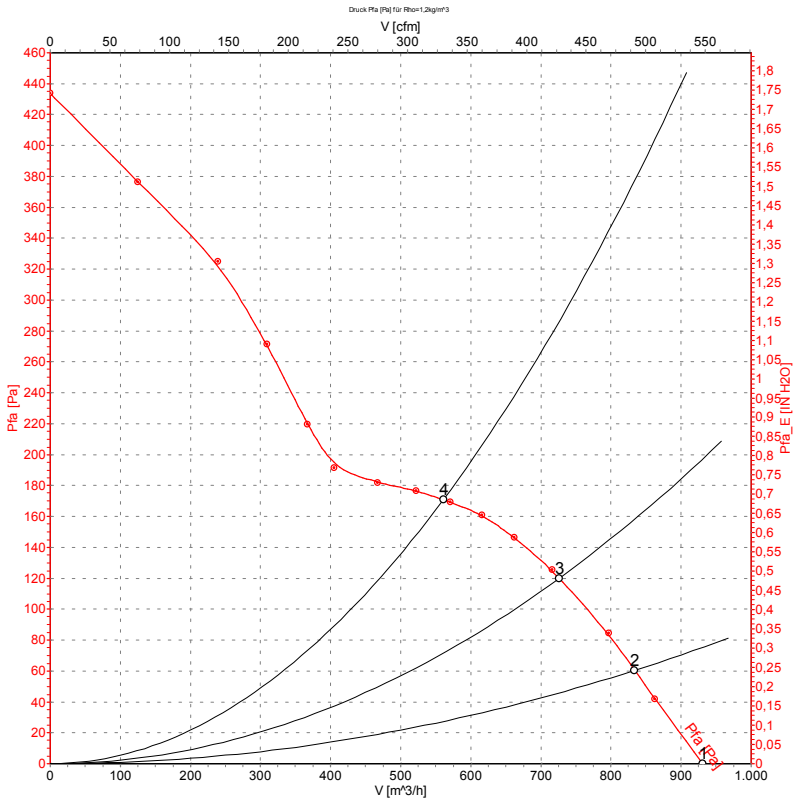

Measurement: LU-57307

Measured values

	U	f	n	P_1	I	$\dot{V}$	p_{fa}
	[V]	[Hz]	[min^{-1}]	[W]	[A]	[m^3/h]	[Pa]
1	400	60	3090	80	0.15	930	0
2	400	60	3015	87	0.15	835	60
3	400	60	2955	94	0.16	725	120
4	400	60	2945	94	0.16	560	170

ebm-papst Mulfingen GmbH & Co. KG · Bachmühle 2 · 74673 Mulfingen · Phone: +49 7938 81-0 · Fax: +49 7938 81-110 · www.ebmpapst.com · info1@de.ebmpapst.com