W2D250-CI02-01

AC axial fan

sickled blades (S series)

with full round nozzle

ebm-papst Mulfingen GmbH & Co. KG
Bachmühle 2
D-74673 Mulfingen
Phone: +49(0)7938/81-0
Fax: +49(0)7938/81-110
info1@de.ebmpapst.com
www.ebmpapst.com

Nominal data

Type	**W2D250-CI02-01**
Motor	**M2D068-CC**

Phase		3~	3~
Nominal voltage	[V]	400	400
Connection		Y	Y
Frequency	[Hz]	50	60
Type of data definition		rfa	rfa
Valid for approval / standard		CE	CE
Speed	[min^{-1}]	2500	2650
Power input	[W]	100	140
Current draw	[A]	0.20	0.23
Max. back pressure	[Pa]	150	150
Max. ambient temperature	[°C]	65	45

ml = max. load · me = max. efficiency · rfa = running at free air · cs = customer specs · cu = customer unit
Subject to alterations

AC axial fan

sickled blades (S series)

with full round nozzle

Technical features

Leackage current	< 0.75 mA
Size	250 mm
Operation mode	S1
Direction of rotation	Counter-clockwise, seen on rotor
Mounting position	Shaft horizontal or rotor on bottom; rotor on top on request
Humidity class	F1-2
Direction of air flow	"A"
Insulation class	"B"
Cable exit	Lateral
Condensate discharge holes	Rotor-side
Bearing motor	Ball bearing
Mass	2.1 kg
Material of blades	Sheet steel, coated in black
Material of guard grille	Steel, phosphated and coated in black plastic
Material of wall ring	Sheet steel, pre-galvanized and coated in black plastic
Product conforming to standard	EN 60335-1
Surface of rotor	Coated in black
Number of blades	9
Type of protection	IP 44
Protection class	I
Max. permissible ambient motor temp. (transp./ storage)	+ 80 °C
Min. permissible ambient motor temp. (transp./storage)	- 40 °C
Approval	CCC

ebm-papst Mulfingen GmbH & Co. KG · Bachmühle 2 · D-74673 Mulfingen · Phone: +49(0)7938/81-0 · Fax: +49(0)7938/81-110 · info1@de.ebmpapst.com · www.ebmpapst.com

AC axial fan

sickled blades (S series)

with full round nozzle

Product drawing

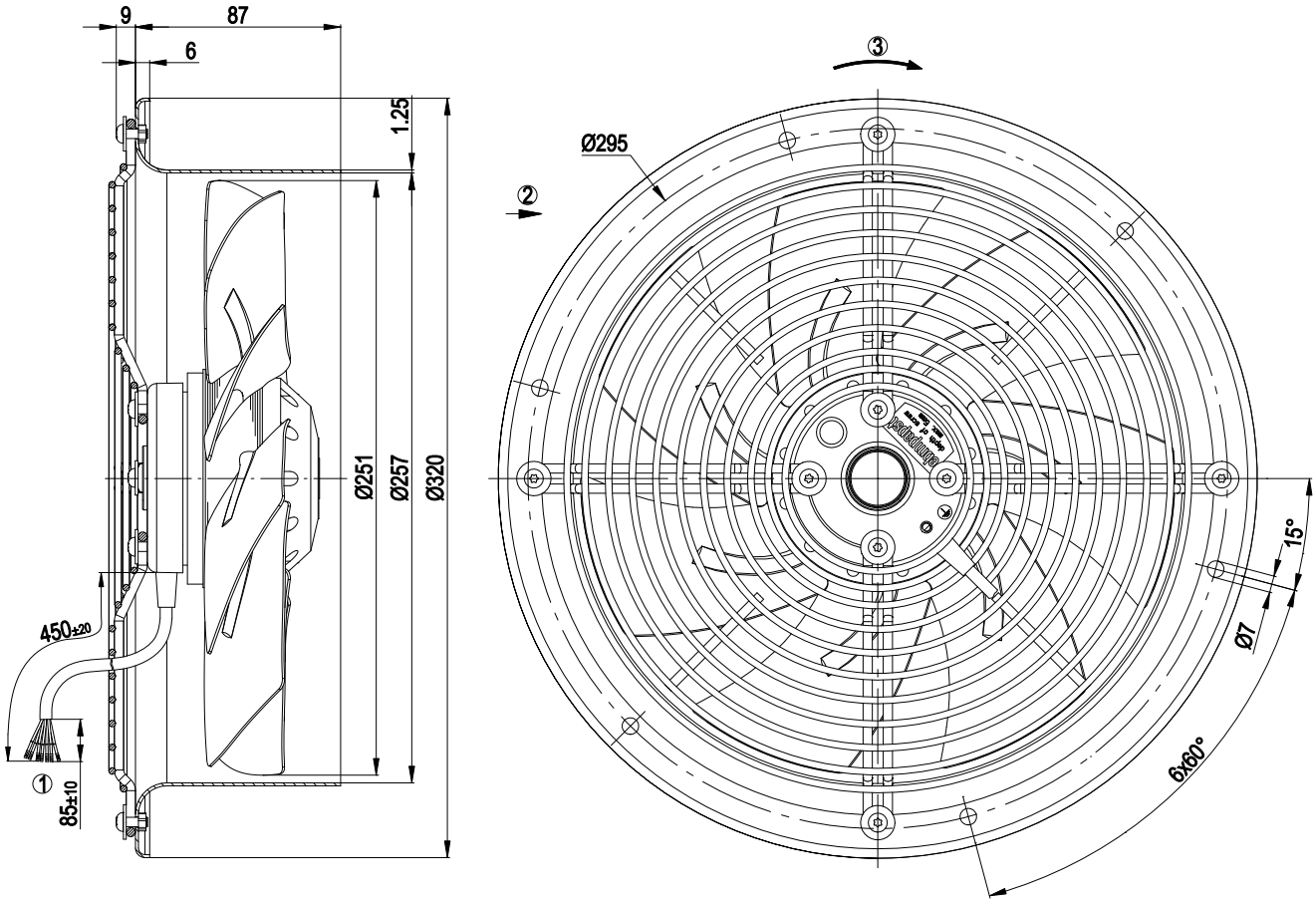

1	Connection line PVC, 7x brass lead tips crimped
2	Direction of air flow "A"
3	Direction of rotation counter-clockwise, seen on rotor

ebm-papst Mulfingen GmbH & Co. KG · Bachmühle 2 · D-74673 Mulfingen · Phone: +49(0)7938/81-0 · Fax: +49(0)7938/81-110 · info1@de.ebmpapst.com · www.ebmpapst.com

AC axial fan

sickled blades (S series)

with full round nozzle

Connection screen

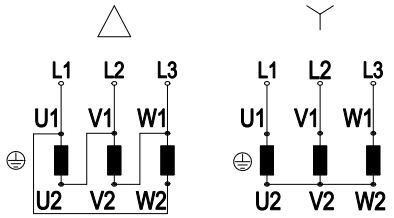

Note: Direction of rotation changes when two phases are reversed

Δ	Delta connection	Y	Star connection	L1	black
L2	blue	L3	brown	U1	black
V1	blue	W1	brown	U2	green
V2	white	W2	yellow		

ebm-papst Mulfingen GmbH & Co. KG · Bachmühle 2 · D-74673 Mulfingen · Phone: +49(0)7938/81-0 · Fax: +49(0)7938/81-110 · info1@de.ebmpapst.com · www.ebmpapst.com

AC axial fan

sickled blades (S series)

with full round nozzle

Charts: Air flow 50 Hz

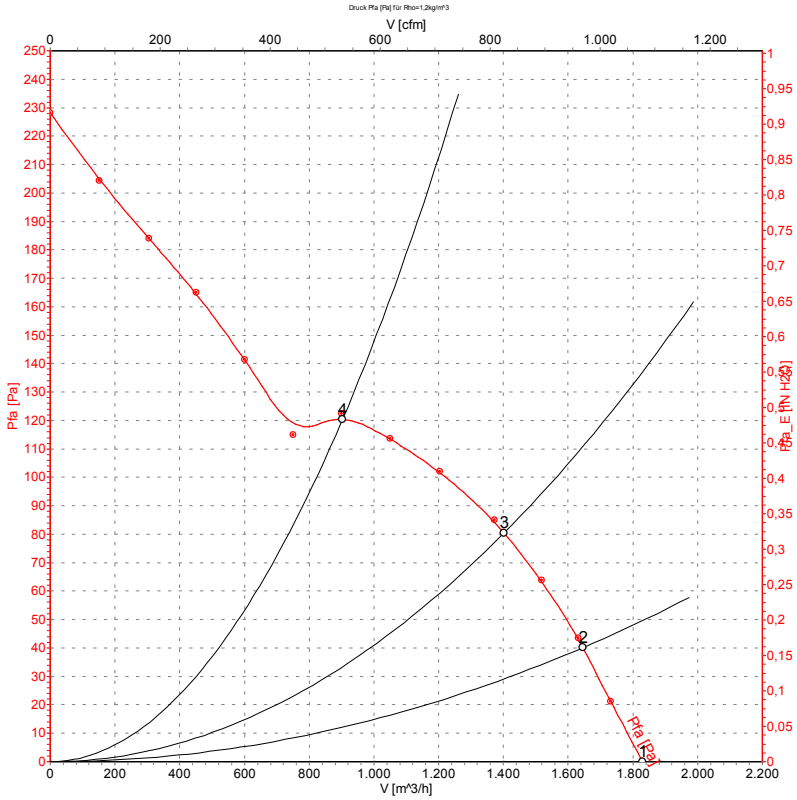

Measurement: LU-59965

Measured values

	U	f	n	P_1	I	$\dot{V}$	p_{fa}
	[V]	[Hz]	[min^{-1}]	[W]	[A]	[m^3/h]	[Pa]
1	400	50	2500	100	0.20	1830	0
2	400	50	2425	111	0.21	1645	40
3	400	50	2360	120	0.21	1400	81
4	400	50	2310	127	0.22	905	122

ebm-papst Mulfingen GmbH & Co. KG · Bachmühle 2 · D-74673 Mulfingen · Phone: +49(0)7938/81-0 · Fax: +49(0)7938/81-110 · info1@de.ebmpapst.com · www.ebmpapst.com

AC axial fan

sickled blades (S series)

with full round nozzle

Charts: Air flow 60 Hz

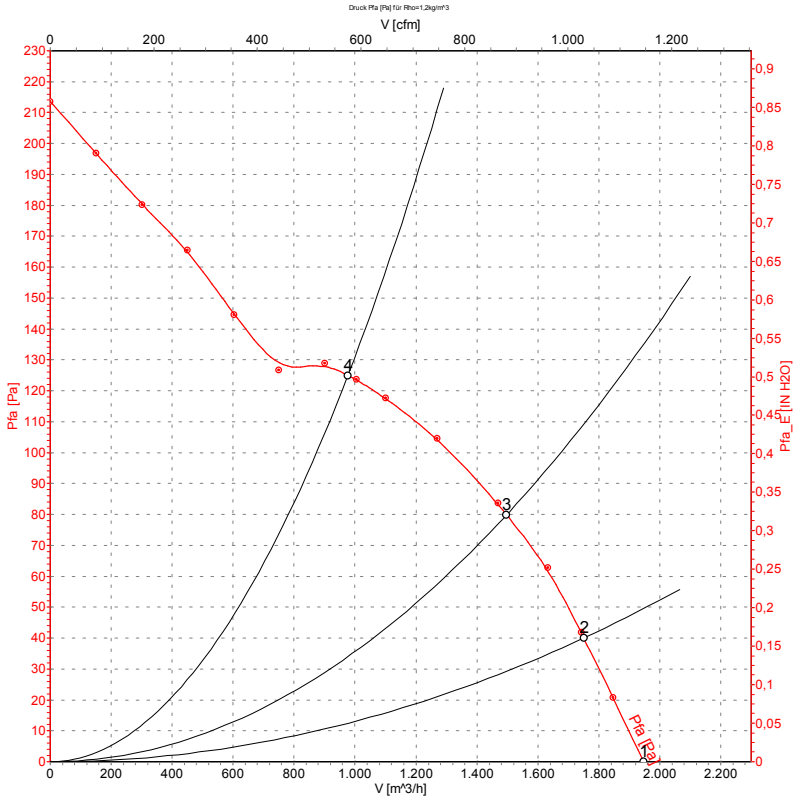

Measurement: LU-59966

Measured values

	U	f	n	P_1	I	$\dot{V}$	p_{fa}
	[V]	[Hz]	[min^{-1}]	[W]	[A]	[m^3/h]	[Pa]
1	400	60	2650	140	0.23	1950	0
2	400	60	2545	148	0.24	1750	40
3	400	60	2450	158	0.25	1495	80
4	400	60	2350	166	0.26	975	125

ebm-papst Mulfingen GmbH & Co. KG · Bachmühle 2 · D-74673 Mulfingen · Phone: +49(0)7938/81-0 · Fax: +49(0)7938/81-110 · info1@de.ebmpapst.com · www.ebmpapst.com