W2D250-GA04-09

AC axial fan

sickled blades (S series)

with full square nozzle

ebm-papst Mulfingen GmbH & Co. KG
Bachmühle 2
D-74673 Mulfingen
Phone: +49(0)7938/81-0
Fax: +49(0)7938/81-110
info1@de.ebmpapst.com
www.ebmpapst.com

Nominal data

Type	**W2D250-GA04-09**
Motor	**M2D068-DF**

Phase		3~	3~
Nominal voltage	[V]	400	400
Connection		Y	Y
Frequency	[Hz]	50	60
Type of data definition		rfa	rfa
Valid for approval / standard		CE	CE
Speed	[min^{-1}]	2750	3050
Power input	[W]	120	190
Current draw	[A]	0.27	0.33
Max. back pressure	[Pa]	115	140
Max. ambient temperature	[°C]	60	75

ml = max. load · me = max. efficiency · rfa = running at free air · cs = customer specs · cu = customer unit
Subject to alterations

AC axial fan

sickled blades (S series)

with full square nozzle

Technical features

Leackage current	< 0.75 mA
Size	250 mm
Operation mode	S1
Direction of rotation	Counter-clockwise, seen on rotor
Mounting position	Shaft horizontal or rotor on bottom; rotor on top on request
Humidity class	F5
Direction of air flow	"V"
Insulation class	"B"
Cable exit	Lateral
Condensate discharge holes	None
Bearing motor	Ball bearing
Mass	3 kg
Material of impeller	Sheet steel, hot-dip galvanised
Material of guard grille	Steel, phosphated and coated in black plastic
Material of wall ring	Sheet steel, pre-galvanised and black plastic-coated
Product conforming to standard	EN 60335-1
Surface of rotor	Coated in black
Number of blades	5
Type of protection	IP 00
Protection class	I
Max. permissible ambient motor temp. (transp./ storage)	+ 80 °C
Min. permissible ambient motor temp. (transp./storage)	- 40 °C
Approval	CCC

ebm-papst Mulfingen GmbH & Co. KG · Bachmühle 2 · D-74673 Mulfingen · Phone: +49(0)7938/81-0 · Fax: +49(0)7938/81-110 · info1@de.ebmpapst.com · www.ebmpapst.com

AC axial fan

sickled blades (S series)

with full square nozzle

Product drawing

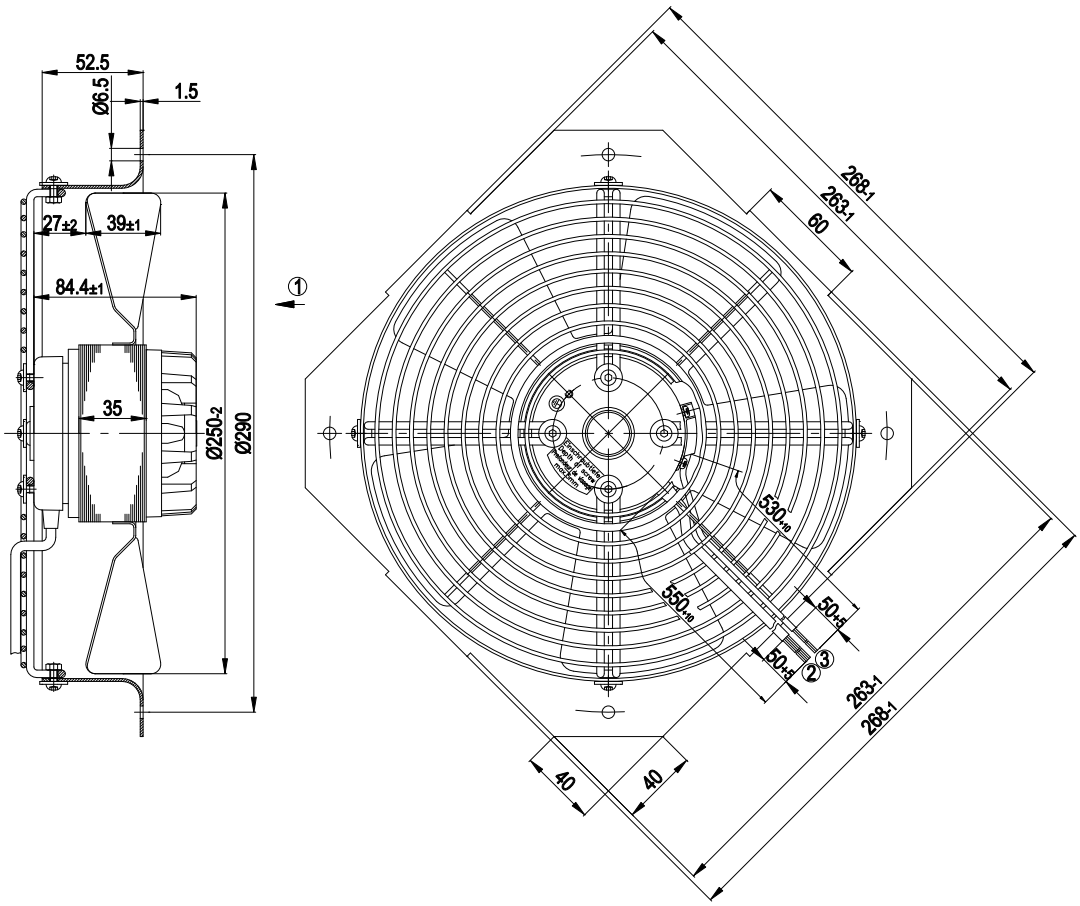

1	Direction of air flow "V"
2	Connection line PVC, 4x brass lead tips crimped
3	Connection for speed monitoring made, AWG24-300V hall generator, motor and hall sensor strands not bared

ebm-papst Mulfingen GmbH & Co. KG · Bachmühle 2 · D-74673 Mulfingen · Phone: +49(0)7938/81-0 · Fax: +49(0)7938/81-110 · info1@de.ebmpapst.com · www.ebmpapst.com

AC axial fan

sickled blades (S series)

with full square nozzle

Connection screen

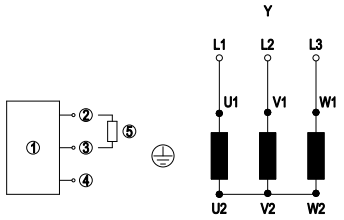

Changing the direction of rotation by reversing the two phases

1	Fan	2	Red (+5V)	3	White (output)
4	Black (0V)	5	4 K7	Y	Star connection
L1	black	L2	blue	L3	brown

ebm-papst Mulfingen GmbH & Co. KG · Bachmühle 2 · D-74673 Mulfingen · Phone: +49(0)7938/81-0 · Fax: +49(0)7938/81-110 · info1@de.ebmpapst.com · www.ebmpapst.com

AC axial fan

sickled blades (S series)

with full square nozzle

Charts: Air flow 50 Hz

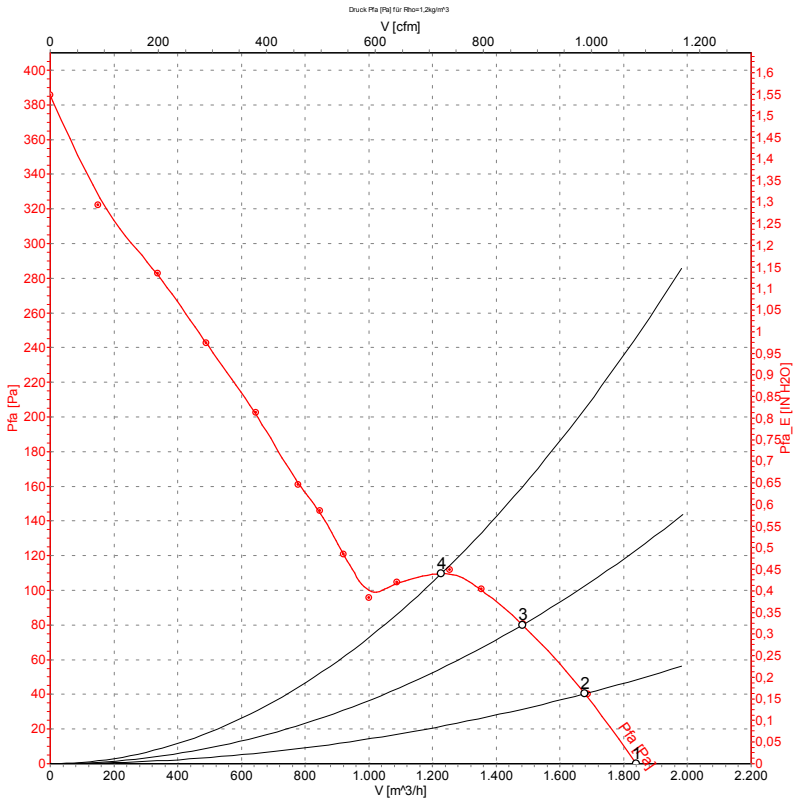

Measurement: LU-14961

Measured values

	U	f	n	P_1	I	$\dot{V}$	p_{fa}
	[V]	[Hz]	[min^{-1}]	[W]	[A]	[m^3/h]	[Pa]
1	400	50	2750	120	0.27	1840	0
2	400	50	2695	141	0.29	1680	42
3	400	50	2670	149	0.30	1480	81
4	400	50	2660	151	0.30	1230	111

ebm-papst Mulfingen GmbH & Co. KG · Bachmühle 2 · D-74673 Mulfingen · Phone: +49(0)7938/81-0 · Fax: +49(0)7938/81-110 · info1@de.ebmpapst.com · www.ebmpapst.com

AC axial fan

sickled blades (S series)

with full square nozzle

Charts: Air flow 60 Hz

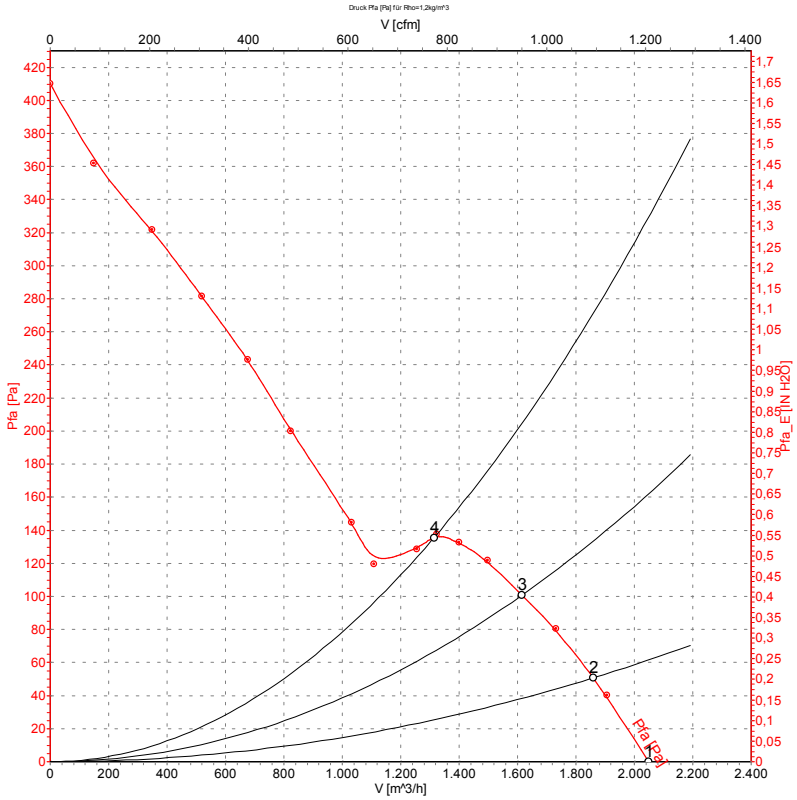

Measurement: LU-14960

Measured values

	U	f	n	P_1	I	$\dot{V}$	p_{fa}
	[V]	[Hz]	[min^{-1}]	[W]	[A]	[m^3/h]	[Pa]
1	400	60	3050	190	0.33	2045	0
2	400	60	2985	201	0.34	1860	51
3	400	60	2935	212	0.36	1615	101
4	400	60	2930	209	0.36	1315	136

ebm-papst Mulfingen GmbH & Co. KG · Bachmühle 2 · D-74673 Mulfingen · Phone: +49(0)7938/81-0 · Fax: +49(0)7938/81-110 · info1@de.ebmpapst.com · www.ebmpapst.com