**W2G130-AA47-26**

# EC axial compact fan

sickled blades (S series)

**ebm-papst Mulfingen GmbH & Co. KG**
Bachmühle 2 · D-74673 Mulfingen
Phone +49 7938 81-0
Fax +49 7938 81-110
info1@de.ebmpapst.com
www.ebmpapst.com

Limited partnership · Headquarters Mulfingen
County court Stuttgart · HRA 590344

General partner Elektrobau Mulfingen GmbH · Headquarters Mulfingen
County court Stuttgart · HRB 590142

## Nominal data

| | | |
|---|---|---|
| **Type** | **W2G130-AA47-26** | |
| **Motor** | **M2G055-BD** | |
| Nominal voltage | VDC | 24 |
| Nominal voltage range | VDC | 16 .. 28 |
| Type of data definition | | fa |
| State | | prelim. |
| Speed | $min^{-1}$ | 2600 |
| Power input | W | 13 |
| Min. ambient temperature | °C | -25 |
| Max. ambient temperature | °C | 60 |

ml = Max. load · me = Max. efficiency · fa = Running at free air · cs = Customer specs · cu = Customer unit
Subject to alterations

# EC axial compact fan

sickled blades (S series)

## Technical features

| | |
|---|---|
| **Mass** | 1 kg |
| **Size** | 130 mm |
| **Surface of rotor** | Coated in black |
| **Material of blades** | Sheet steel, coated in black |
| **Material of wall ring** | Die-cast aluminium |
| **Material of guard grille** | Steel, bright galvanised and blue chromated |
| **Number of blades** | 7 |
| **Direction of air flow** | "V" |
| **Direction of rotation** | Counter-clockwise, seen on rotor |
| **Type of protection** | IP 20 |
| **Insulation class** | "B" |
| **Mounting position** | Any |
| **Condensate discharge holes** | None |
| **Operation mode** | S1 |
| **Motor bearing** | Ball bearing |
| **Technical features** | - Tach output<br>- Motor current limit |
| **Electrical leads** | Via terminal strip |
| **Motor protection** | Reverse polarity and locked-rotor protection |
| **Protection class** | I (if protective earth is connected by customer) |
| **Approval** | CSA C22.2 Nr.113; UL 507 |



ebm-papst Mulfingen GmbH & Co. KG · Bachmühle 2 · D-74673 Mulfingen · Phone +49 (0) 7938 81-0 · Fax +49 (0) 7938 81-110 · info1@de.ebmpapst.com · www.ebmpapst.com

# EC axial compact fan

sickled blades (S series)

## Product drawing

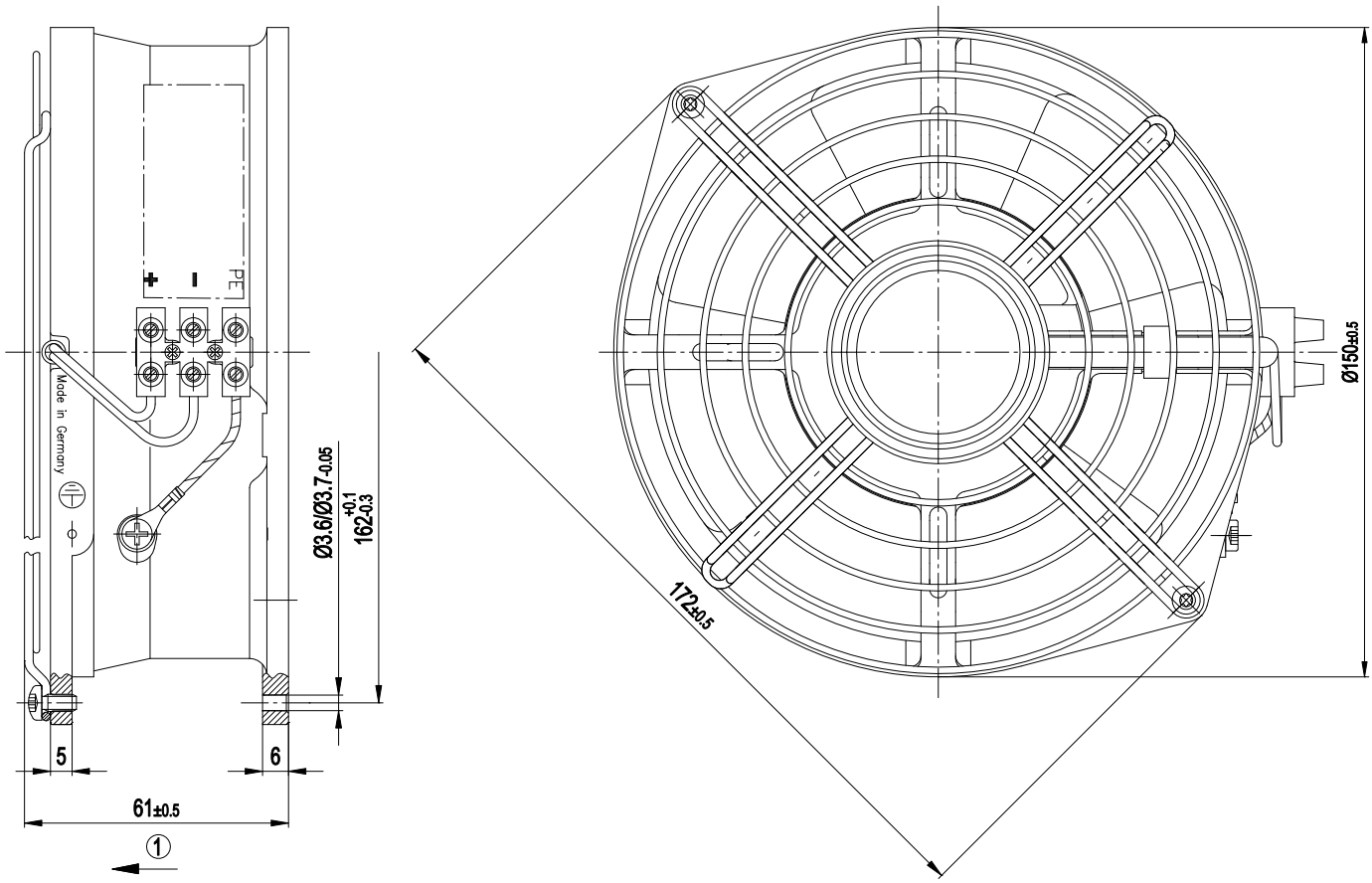


| | |
|---|---|
| 1 | Direction of air flow "V" |

## Connection screen

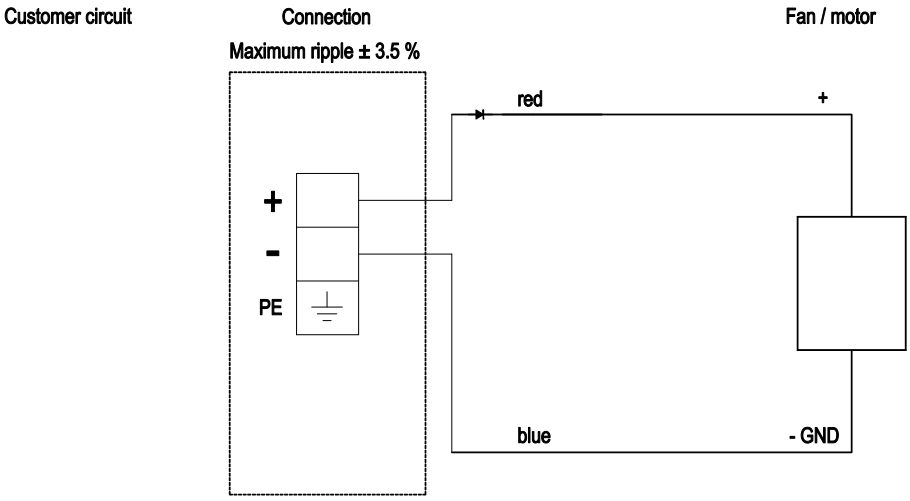




ebm-papst Mulfingen GmbH & Co. KG · Bachmühle 2 · D-74673 Mulfingen · Phone +49 (0) 7938 81-0 · Fax +49 (0) 7938 81-110 · info1@de.ebmpapst.com · www.ebmpapst.com

# EC axial compact fan

sickled blades (S series)

## Charts: Air flow

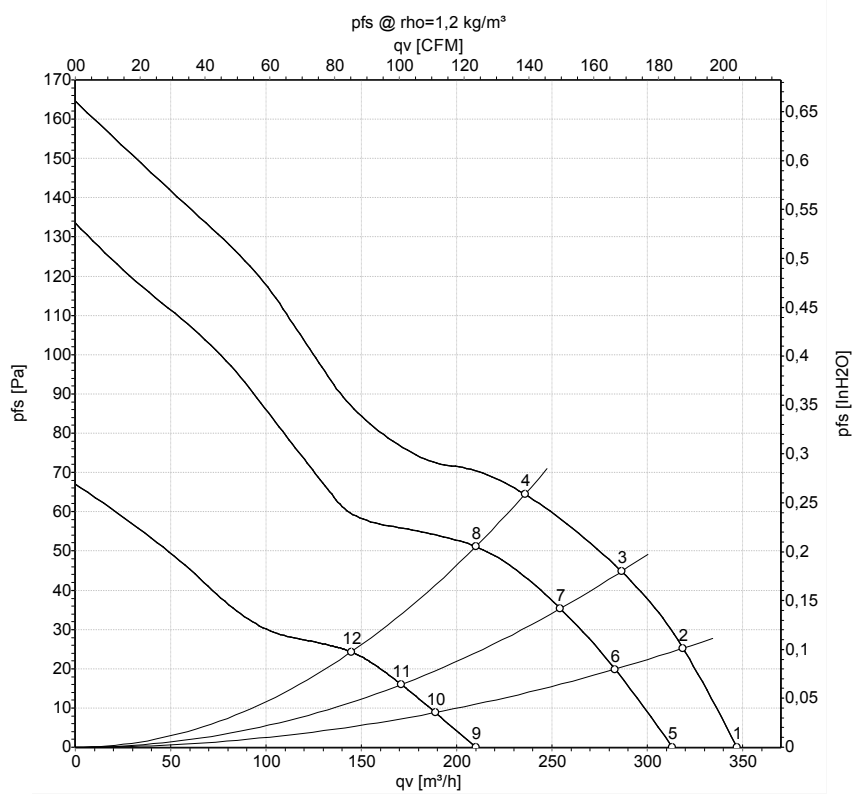


Measurement: LU-33602
Measurement: LU-33601
Measurement: LU-33603

Air performance measured as per ISO 5801 Installation category A. For detailed information on the measuring set-up, please contact ebm-papst. Suction-side noise levels: LwA measured as per ISO 13347 / LpA measured with 1m distance to fan axis. The values given are valid under the measuring conditions mentioned above and may vary according to the actual installation situation. With any deviation from the standard set-up, the specific values have to be checked and reviewed with the unit installed.

## Measured values

| | U | n | $P_{ed}$ | I | qv | $p_{fs}$ |
|---|---|---|---|---|---|---|
| | V | $min^{-1}$ | W | A | $m^3/h$ | Pa |
| 1 | 28 | 3125 | 15 | 0.61 | 345 | 0 |
| 2 | 28 | 3050 | 16 | 0.62 | 320 | 25 |
| 3 | 28 | 3005 | 16 | 0.63 | 285 | 45 |
| 4 | 28 | 2970 | 17 | 0.64 | 235 | 65 |
| 5 | 24 | 2770 | 11 | 0.57 | 315 | 0 |
| 6 | 24 | 2715 | 12 | 0.58 | 285 | 20 |
| 7 | 24 | 2680 | 12 | 0.58 | 255 | 35 |
| 8 | 24 | 2650 | 12 | 0.59 | 210 | 50 |
| 9 | 16 | 1885 | 5.0 | 0.44 | 210 | 0 |
| 10 | 16 | 1865 | 5.0 | 0.45 | 190 | 9 |
| 11 | 16 | 1855 | 5.0 | 0.46 | 170 | 16 |
| 12 | 16 | 1835 | 5.0 | 0.47 | 145 | 24 |

U = Supply voltage · n = Speed · $P_{ed}$ = Power input · I = Current draw · qv = Air flow · $p_{fs}$ = Pressure increase



ebm-papst Mulfingen GmbH & Co. KG · Bachmühle 2 · D-74673 Mulfingen · Phone +49 (0) 7938 81-0 · Fax +49 (0) 7938 81-110 · info1@de.ebmpapst.com · www.ebmpapst.com