W2S130-AA03-01

AC axial compact fan



ebm-papst Mulfingen GmbH & Co. KG
Bachmühle 2 · D-74673 Mulfingen
Phone +49 7938 81-0
Fax +49 7938 81-110
info1@de.ebmpapst.com
www.ebmpapst.com

Limited partnership · Headquarters Mulfingen
Amtsgericht (court of registration) Stuttgart · HRA 590344

General partner Elektrobau Mulfingen GmbH · Headquarters Mulfingen
Amtsgericht (court of registration) Stuttgart · HRB 590142

Nominal data

Type	**W2S130-AA03-01**
Motor	**M2S052-CA**

Phase		1~	1~
Nominal voltage	VAC	230	230
Frequency	Hz	50	60
Method of obtaining data		fa	fa
Valid for approval/standard		CE	CE
Speed	min^{-1}	2800	3250
Power consumption	W	45	39
Current draw	A	0.31	0.25
Max. back pressure	Pa	80	120
Min. ambient temperature	°C	-25	-25
Max. ambient temperature	°C	50	70
Starting current	A	0.45	0.40

ml = Max. load · me = Max. efficiency · fa = Free air · cs = Customer specification · ce = Customer equipment
Subject to change

Technical description

Weight	1.1 kg
Fan size	130 mm
Rotor surface	Rotor open, painted black
Blade material	Sheet steel, painted black
Fan housing material	Die-cast aluminum, painted black
Number of blades	7
Airflow direction	"V"
Direction of rotation	Counterclockwise, viewed toward rotor
Degree of protection	IP20
Insulation class	"B"
Max. permitted ambient temp. for motor (transport/storage)	+ 80 °C
Min. permitted ambient temp. for motor (transport/storage)	- 40 °C
Installation position	Any
Condensation drainage holes	None, open rotor
Mode	S1
Motor storage	Ball bearing
Touch current according to IEC 60990 (measuring circuit Fig. 4, TN system)	< 0.75 mA
Motor protection	Thermal overload protector (TOP) internally connected
Protection class	I (if protective earth is connected by customer to the housing's connection point)
Conformity with standards	EN 60335-1; CE
Approval	UL 507; CCC; EAC; VDE; CSA C22.2 No. 113

ebm-papst Mulfingen GmbH & Co. KG · Bachmühle 2 · D-74673 Mulfingen · Phone +49 (0) 7938 81-0 · Fax +49 (0) 7938 81-110 · info1@de.ebmpapst.com · www.ebmpapst.com

AC axial compact fan

Product drawing

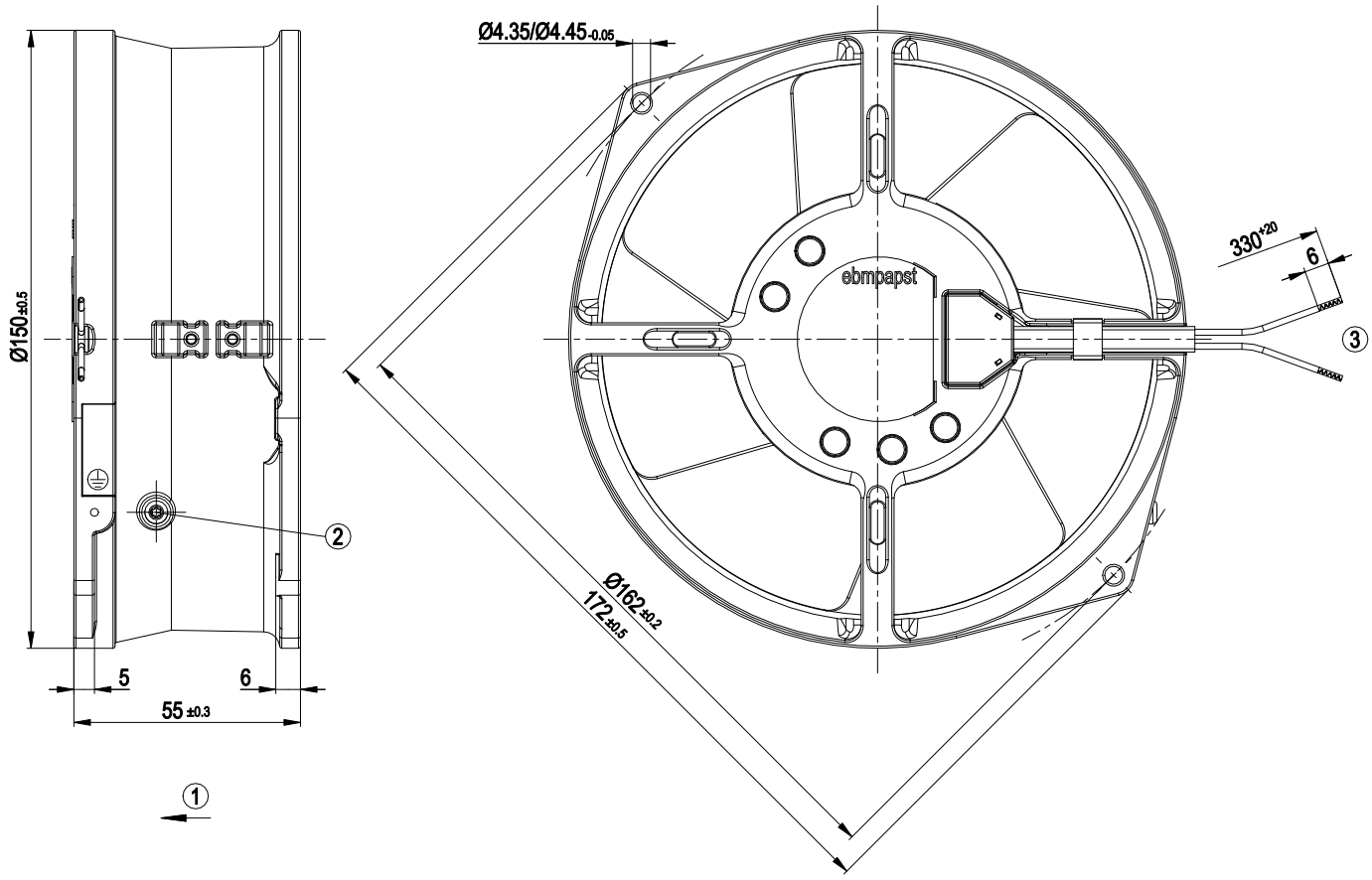

1	Direction of air flow "V"
2	M4 screw for fastening ground connector
3	Cable AWG20, 2x crimped splices

Connection diagram

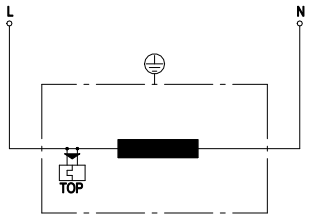

L	= black
N	= black
TOP	= thermal overload protector

ebm-papst Mulfingen GmbH & Co. KG · Bachmühle 2 · D-74673 Mulfingen · Phone +49 (0) 7938 81-0 · Fax +49 (0) 7938 81-110 · info1@de.ebmpapst.com · www.ebmpapst.com

AC axial compact fan

Curves: Air performance 50 Hz

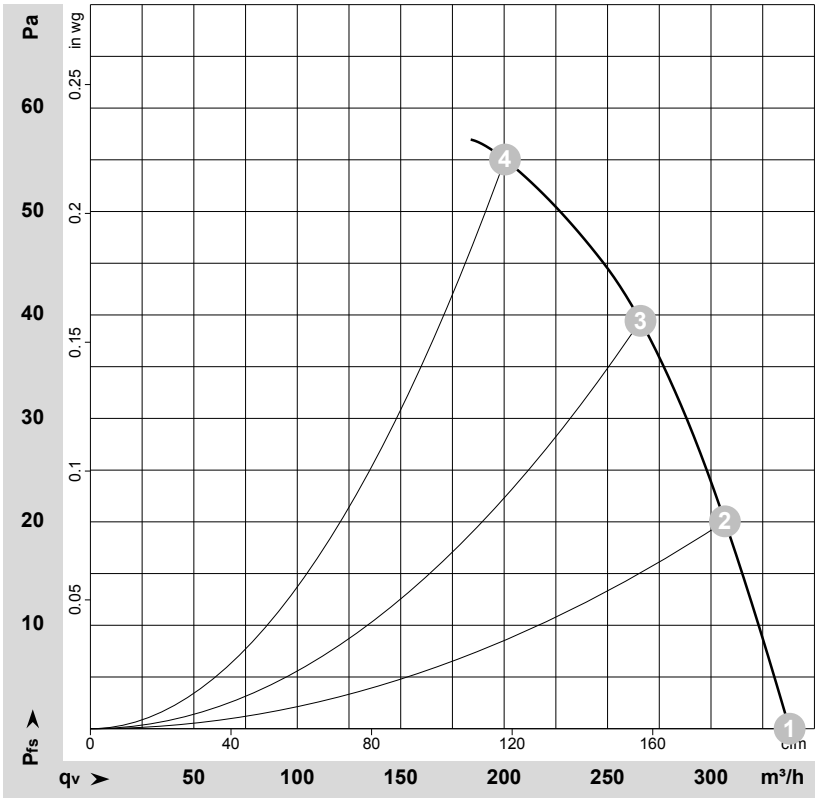

ρ = 1,15 kg/m³ ± 2%

Measurement: LU-58475

Air performance measured according to ISO 5801 installation category A. For detailed information on the measurement setup, contact ebm-papst. Intake sound level: Sound power level according to ISO 13347 / sound pressure level measured at 1 m distance from fan axis. The values given are valid under the specified measuring conditions and may vary due to conditions of installation. For deviations from the standard configuration, the parameters have to be checked on the installed unit.

Measured values

	U	f	n	P_e	I	qv	p_{fs}
	V	Hz	min^{-1}	W	A	m^3/h	Pa
1	230	50	2800	45	0.31	340	0
2	230	50	2795	45	0.31	305	20
3	230	50	2780	46	0.31	265	40
4	230	50	2780	46	0.31	200	55

U = Power supply · f = Frequency · n = Speed · P_e = Power consumption · I = Current draw · qv = Air flow · p_{fs} = Pressure increase

ebm-papst Mulfingen GmbH & Co. KG · Bachmühle 2 · D-74673 Mulfingen · Phone +49 (0) 7938 81-0 · Fax +49 (0) 7938 81-110 · info1@de.ebmpapst.com · www.ebmpapst.com

AC axial compact fan

Curves: Air performance 60 Hz

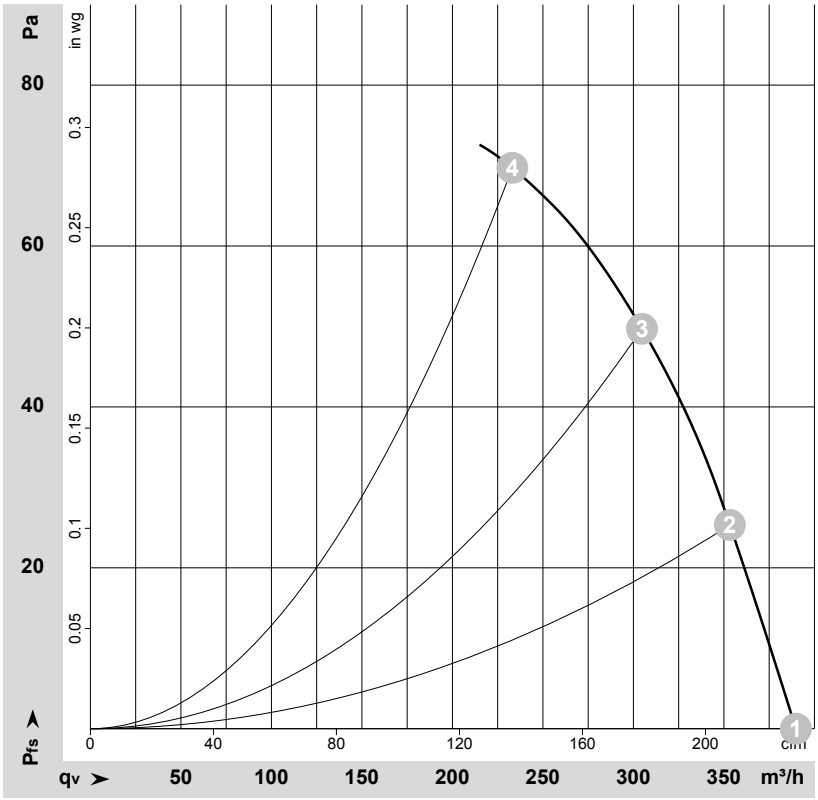

ρ = 1,15 kg/m³ ± 2%

Measurement: LU-58476

Air performance measured according to ISO 5801 installation category A. For detailed information on the measurement setup, contact ebm-papst. Intake sound level: Sound power level according to ISO 13347 / sound pressure level measured at 1 m distance from fan axis. The values given are valid under the specified measuring conditions and may vary due to conditions of installation. For deviations from the standard configuration, the parameters have to be checked on the installed unit.

Measured values

	U	f	n	P_e	I	qv	p_{fs}
	V	Hz	min^{-1}	W	A	m^3/h	Pa
1	230	60	3250	39	0.25	390	0
2	230	60	3200	42	0.25	355	25
3	230	60	3165	43	0.26	305	50
4	230	60	3145	44	0.26	235	70

U = Power supply · f = Frequency · n = Speed · P_e = Power consumption · I = Current draw · qv = Air flow · p_{fs} = Pressure increase

ebm-papst Mulfingen GmbH & Co. KG · Bachmühle 2 · D-74673 Mulfingen · Phone +49 (0) 7938 81-0 · Fax +49 (0) 7938 81-110 · info1@de.ebmpapst.com · www.ebmpapst.com