W2S130-AA03-44

AC axial compact fan

ebm-papst Mulfingen GmbH & Co. KG
Bachmühle 2 · D-74673 Mulfingen
Phone +49 7938 81-0
Fax +49 7938 81-110
info1@de.ebmpapst.com
www.ebmpapst.com

Limited partnership · Headquarters Mulfingen
County court Stuttgart · HRA 590344

General partner Elektrobau Mulfingen GmbH · Headquarters Mulfingen
County court Stuttgart · HRB 590142

Nominal data

Type	**W2S130-AA03-44**
Motor	**M2S052-CA**

Phase		1~	1~
Nominal voltage	VAC	230	230
Frequency	Hz	50	60
Type of data definition		fa	fa
Valid for approval / standard		CE	CE
Speed	min^{-1}	2800	3250
Power input	W	45	39
Current draw	A	0.31	0.25
Max. back pressure	Pa	80	120
Max. ambient temperature	°C	50	70
Starting current	A	0.45	0.40

ml = max. load · me = max. efficiency · fa = running at free air · cs = customer specs · cu = customer unit
Subject to alterations

AC axial compact fan

Technical features

Mass	1.1 kg
Size	130 mm
Surface of rotor	Rotor open, coated in black
Material of blades	Sheet steel, coated in black
Material of wall ring	Die-cast aluminium, coated in black
Number of blades	7
Direction of air flow	"V"
Direction of rotation	Counter-clockwise, seen on rotor
Type of protection	IP 20
Insulation class	"B"
Max. permissible ambient motor temp. (transp./ storage)	+ 80 °C
Min. permissible ambient motor temp. (transp./storage)	- 40 °C
Mounting position	Any
Condensate discharge holes	None, open rotor
Operation mode	S1
Motor bearing	Ball bearing
Touch current acc. IEC 60990 (measuring network Fig. 4, TN system)	< 0.75 mA
Electrical leads	With plug
Motor protection	Thermal overload protector (TOP) wired internally
Protection class	I (if protective earth is connected by customer)
Product conforming to standard	CE
Approval	VDE; UL 507; CSA C22.2 Nr.113

ebm-papst Mulfingen GmbH & Co. KG · Bachmühle 2 · D-74673 Mulfingen · Phone +49 (0) 7938 81-0 · Fax +49 (0) 7938 81-110 · info1@de.ebmpapst.com · www.ebmpapst.com

AC axial compact fan

Product drawing

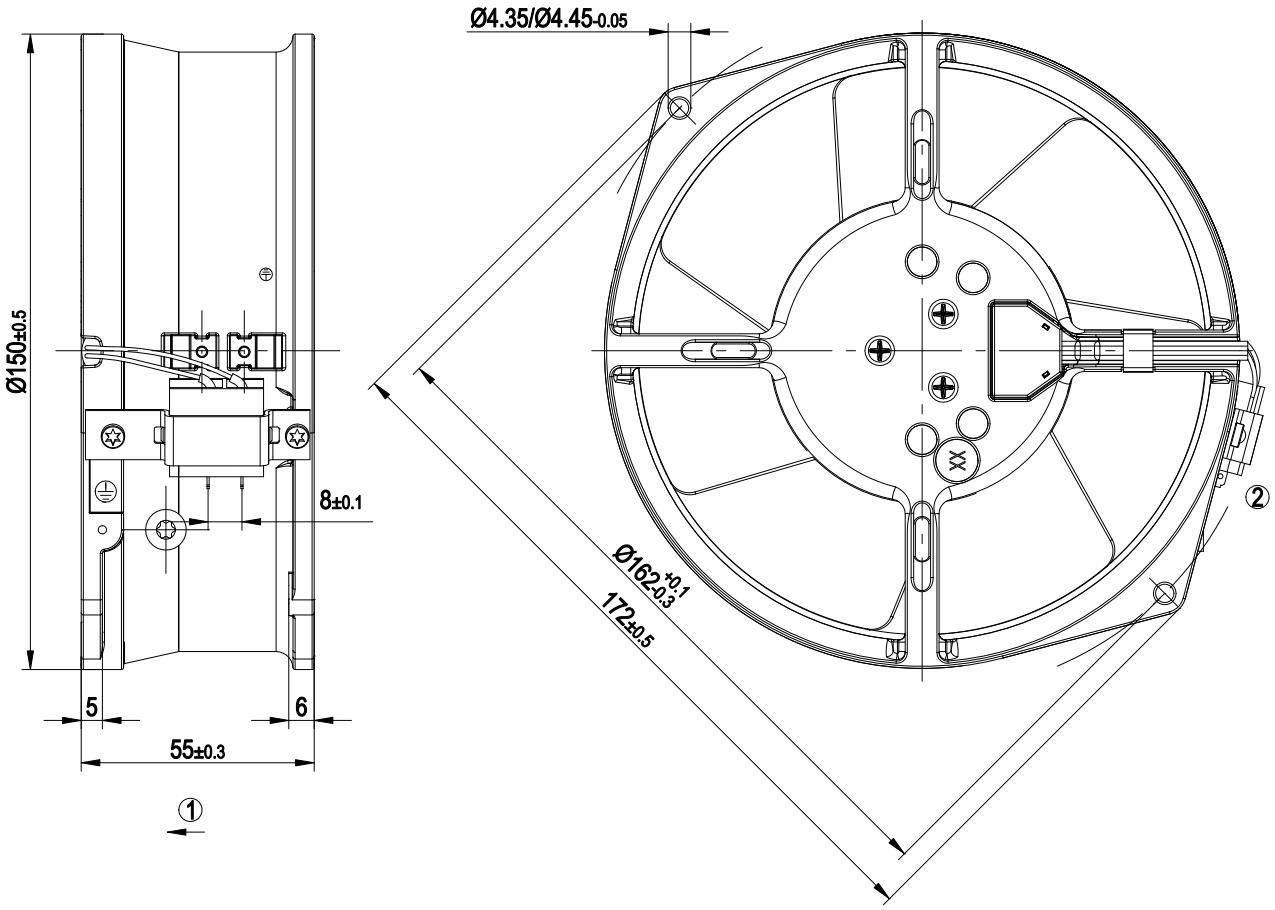

1	Direction of air flow "V"
2	Connector shell with 2 x flat plugs 2.8 x 0.5 mm

Connection screen

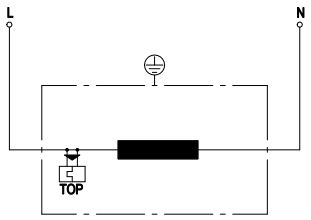

L	= black
N	= black
TOP	= Thermal overload protector

ebm-papst Mulfingen GmbH & Co. KG · Bachmühle 2 · D-74673 Mulfingen · Phone +49 (0) 7938 81-0 · Fax +49 (0) 7938 81-110 · info1@de.ebmpapst.com · www.ebmpapst.com

AC axial compact fan

Charts: Air flow 50 Hz

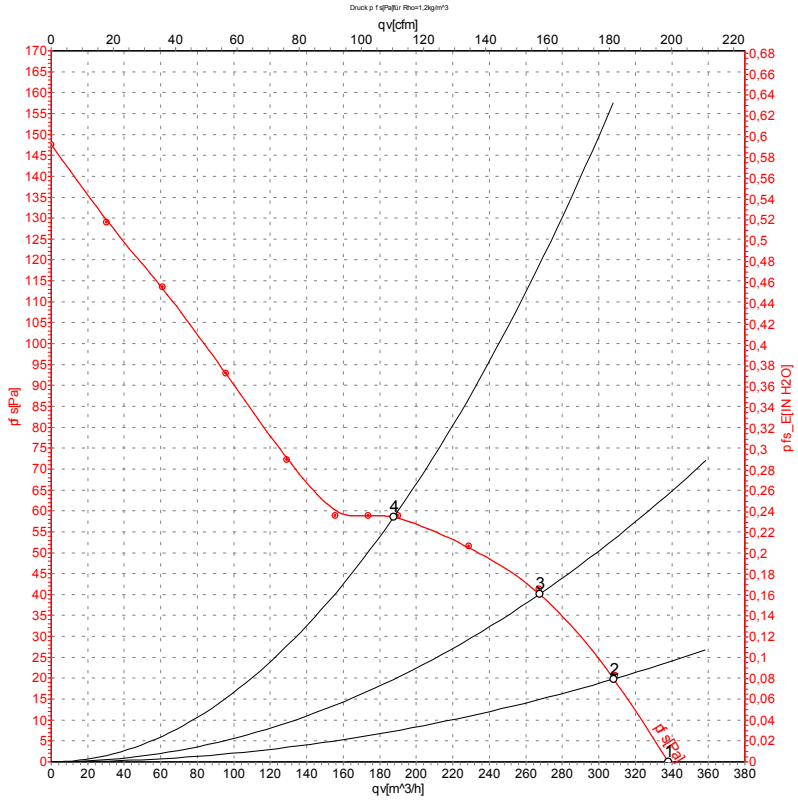

Measurement: LU-58475

Air performance measured as per ISO 5801 Installation category A. For detailed information on the measuring set-up, please contact ebm-papst. Suction-side noise levels: LwA measured as per ISO 13347 / LpA measured with 1m distance to fan axis. The values given are valid under the measuring conditions mentioned above and may vary according to the actual installation situation. With any deviation from the standard set-up, the specific values have to be checked and reviewed with the unit installed.

Measured values

	U	f	n	P_e	I	qv	p_{fs}
	V	Hz	min^{-1}	W	A	m^3/h	Pa
1	230	50	2800	45	0.31	340	0
2	230	50	2795	45	0.31	310	20
3	230	50	2780	46	0.31	270	40
4	230	50	2780	46	0.31	190	59

U = Supply voltage · f = Frequency · n = Speed · P_e = Power input · I = Current draw · qv = Air flow · p_{fs} = Pressure increase

ebm-papst Mulfingen GmbH & Co. KG · Bachmühle 2 · D-74673 Mulfingen · Phone +49 (0) 7938 81-0 · Fax +49 (0) 7938 81-110 · info1@de.ebmpapst.com · www.ebmpapst.com

AC axial compact fan

Charts: Air flow 60 Hz

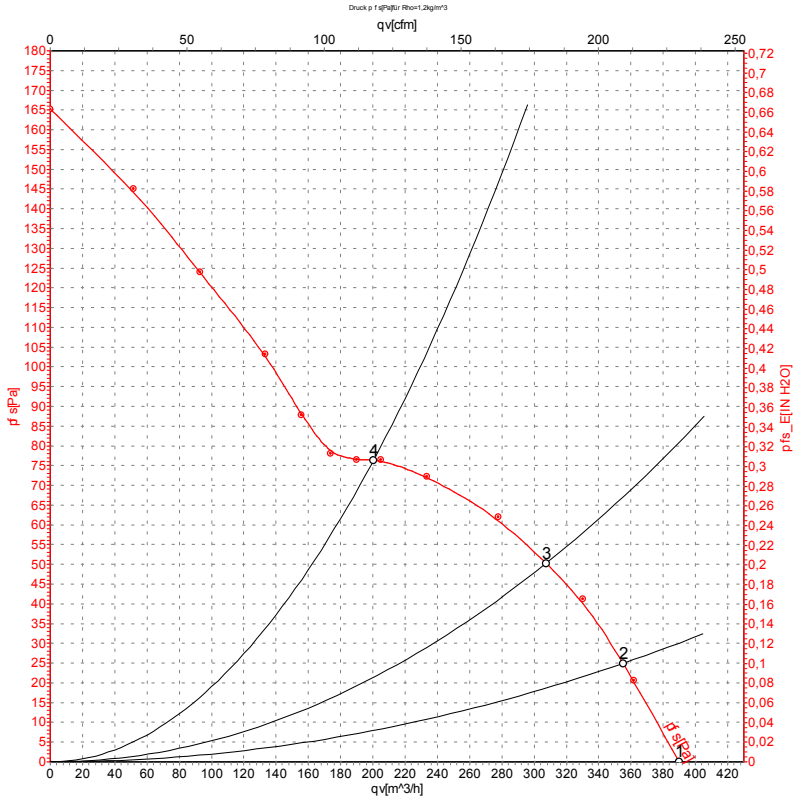

Measurement: LU-58476

Air performance measured as per ISO 5801 Installation category A. For detailed information on the measuring set-up, please contact ebm-papst. Suction-side noise levels: LwA measured as per ISO 13347 / LpA measured with 1m distance to fan axis. The values given are valid under the measuring conditions mentioned above and may vary according to the actual installation situation. With any deviation from the standard set-up, the specific values have to be checked and reviewed with the unit installed.

Measured values

	U	f	n	P_e	I	qv	p_{fs}
	V	Hz	min^{-1}	W	A	m^3/h	Pa
1	230	60	3250	39	0.25	390	0
2	230	60	3200	42	0.25	355	25
3	230	60	3165	43	0.26	305	50
4	230	60	3170	43	0.26	200	75

U = Supply voltage · f = Frequency · n = Speed · P_e = Power input · I = Current draw · qv = Air flow · p_{fs} = Pressure increase

ebm-papst Mulfingen GmbH & Co. KG · Bachmühle 2 · D-74673 Mulfingen · Phone +49 (0) 7938 81-0 · Fax +49 (0) 7938 81-110 · info1@de.ebmpapst.com · www.ebmpapst.com