W3G630-GQ37-21

EC axial fan - HyBlade®

sickled blades (S series)

with full square nozzle

ebm-papst Mulfingen GmbH & Co. KG
Bachmühle 2 · D-74673 Mulfingen
Phone +49 7938 81-0
Fax +49 7938 81-110
info1@de.ebmpapst.com
www.ebmpapst.com

Limited partnership · Headquarters Mulfingen
County court Stuttgart · HRA 590344

General partner Elektrobau Mulfingen GmbH · Headquarters Mulfingen
County court Stuttgart · HRB 590142

ErP2015 EXCEEDS THE NORM

Nominal data

Type	**W3G630-GQ37-21**	
Motor	**M3G112-GA**	
Phase		1~
Nominal voltage	VAC	230
Nominal voltage range	VAC	200 .. 277
Frequency	Hz	50/60
Type of data definition		ml
Speed	min^{-1}	1000
Power input	W	720
Current draw	A	3.2
Max. back pressure	Pa	140
Min. ambient temperature	°C	-25
Max. ambient temperature	°C	60

ml = Max. load · me = Max. efficiency · fa = Running at free air · cs = Customer specs · cu = Customer unit
Subject to alterations

Data according to ErP directive

Installation category	A
Efficiency category	Static
Variable speed drive	Yes
Specific ratio*	1.00

* Specific ratio = 1 + p_{fs} / 100 000 Pa

		Actual	Request 2013	Request 2015
Overall efficiency η_{es}	%	44.1	28.7	32.7
Efficiency grade N		51.4	36	40
Power input P_{ed}	kW	0.69		
Air flow q_v	m^3/h	8080		
Pressure increase p_{fs}	Pa	124		
Speed n	min^{-1}	1005		

Data definition with optimum efficiency. LU-116825
The ErP data is determined using a motor-impeller combination in a standardised measurement configuration.

EC axial fan - HyBlade®

sickled blades (S series)

with full square nozzle

Technical features

Mass	23.8 kg
Size	630 mm
Surface of rotor	Coated in black
Material of blades	Press-fitted sheet steel blank, sprayed with PP plastic
Material of wall ring	Sheet steel, pre-galvanised and coated in black plastic (RAL 9005)
Material of guard grille	Steel, coated in black plastic (RAL9005)
Number of blades	5
Direction of air flow	"V"
Direction of rotation	Counter-clockwise, seen on rotor
Type of protection	IP 54
Insulation class	"B"
Humidity class	F4-1
Max. permissible ambient motor temp. (transp./ storage)	+80 °C
Min. permissible ambient motor temp. (transp./storage)	-40 °C
Mounting position	Shaft horizontal or rotor on bottom; rotor on top on request
Condensate discharge holes	Rotor-side
Operation mode	S1
Motor bearing	Ball bearing
Technical features	- Output 10 VDC, max. 10 mA - Alarm relay - Motor current limit - PFC, active - Soft start - Control input 10-0 VDC Control interface with SELV potential safely disconnected from the mains - Over-temperature protected electronics / motor - Line undervoltage / phase failure detection
EMC interference immunity	Acc. to EN 61000-6-2 (industrial environment)
EMC harmonics	Acc. to EN 61000-3-2/3
EMC interference emission	Acc. to EN 61000-6-4 (industrial environment)
Touch current acc. IEC 60990 (measuring network Fig. 4, TN system)	<= 3.5 mA
Motor protection	Thermal overload protector (TOP) wired internally
Cable exit	Variable
Protection class	I (if protective earth is connected by customer)
Product conforming to standard	EN 61800-5-1; CE
Approval	EAC

ebm-papst Mulfingen GmbH & Co. KG · Bachmühle 2 · D-74673 Mulfingen · Phone +49 (0) 7938 81-0 · Fax +49 (0) 7938 81-110 · info1@de.ebmpapst.com · www.ebmpapst.com

EC axial fan - HyBlade®

sickled blades (S series)

with full square nozzle

Product drawing

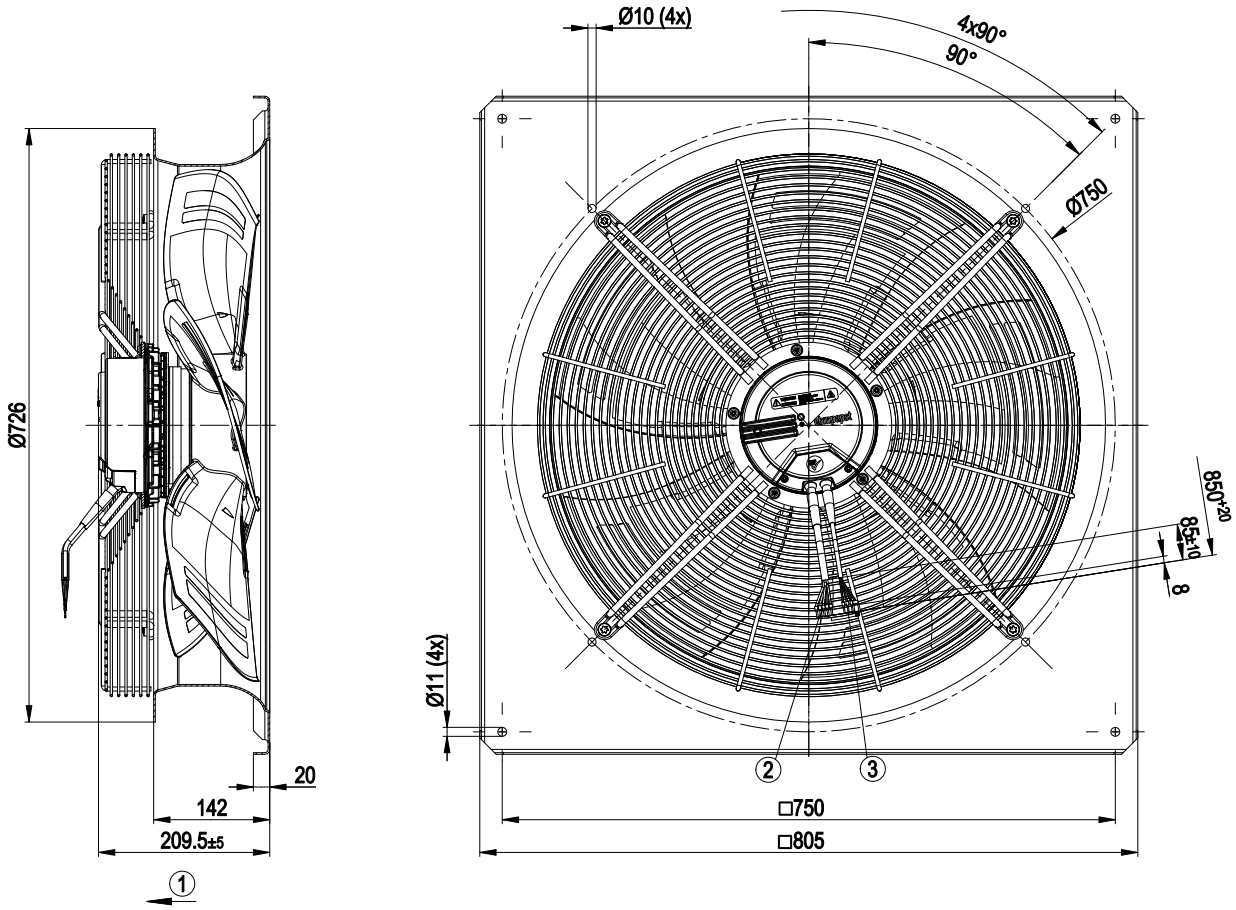

1	Direction of air flow "V"
2	Connection line PVC AWG18, 5x crimped core-end sleeves
3	Connection line PVC AWG22, 3x crimped core-end sleeves

ebm-papst Mulfingen GmbH & Co. KG · Bachmühle 2 · D-74673 Mulfingen · Phone +49 (0) 7938 81-0 · Fax +49 (0) 7938 81-110 · info1@de.ebmpapst.com · www.ebmpapst.com

EC axial fan - HyBlade®

sickled blades (S series)

with full square nozzle

Connection screen

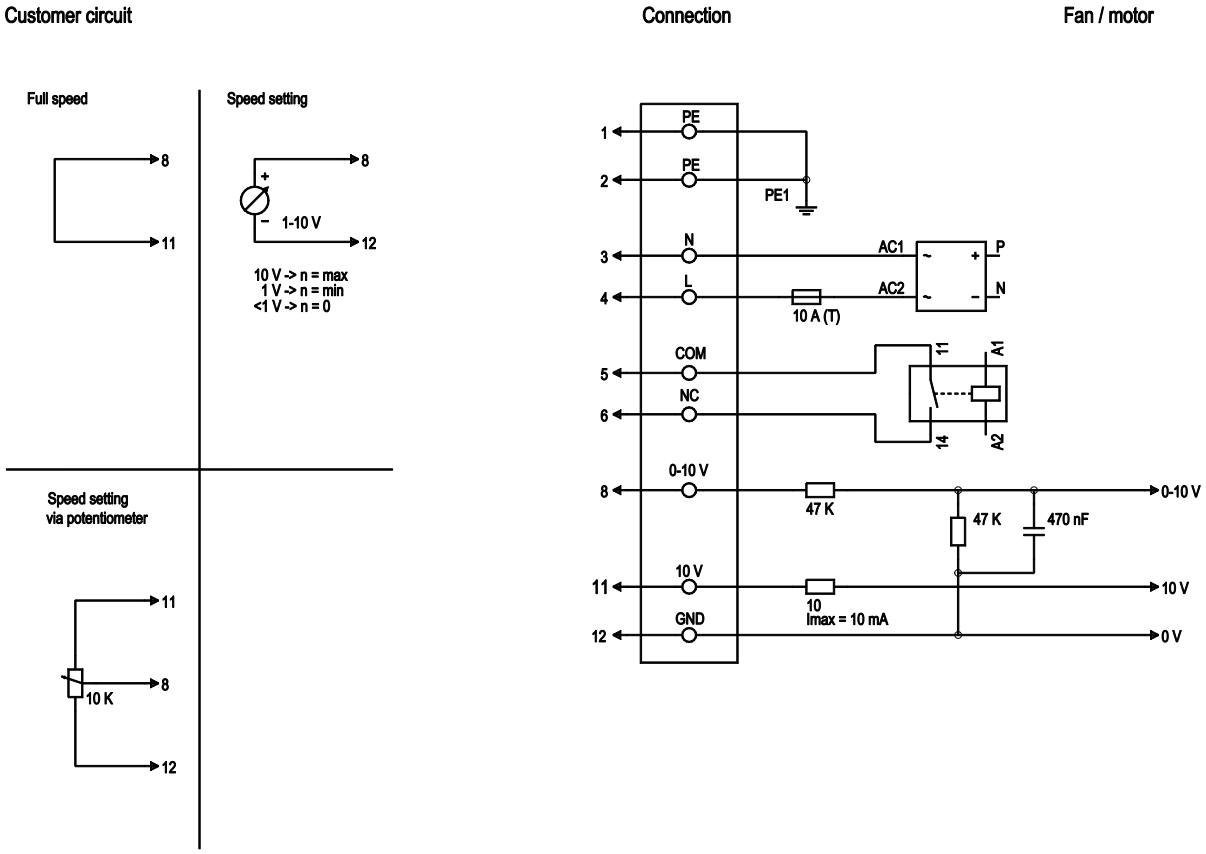

No.	Conn.	Designation	Colour	Function / assignment
1	1,2	PE	green/yellow	Protective earth
1	3	N	blue	Supply voltage, neutral conductor, 50/60 Hz
1	4	L	black	Supply voltage, phase, 50/60 Hz
1	5	COM	white 1	Floating status message contact, break for failure (2 A, max. 250 VAC, min. 10 mA, AC1)
1	6	NC	white 2	Floating status message contact, break for failure
2	8	0-10 V	yellow	Control input, set value 0-10 VDC, impedance 100 kΩ, SELV
2	11	10 VDC	red	Voltage output 10 VDC (+/-3%), max. 10 mA, supply voltage for external devices (e.g. potentiometer), SELV
2	12	GND	blue	Reference mass for control interface, SELV

ebm-papst Mulfingen GmbH & Co. KG · Bachmühle 2 · D-74673 Mulfingen · Phone +49 (0) 7938 81-0 · Fax +49 (0) 7938 81-110 · info1@de.ebmpapst.com · www.ebmpapst.com

EC axial fan - HyBlade®

sickled blades (S series)

with full square nozzle

Charts: Air flow 50 Hz

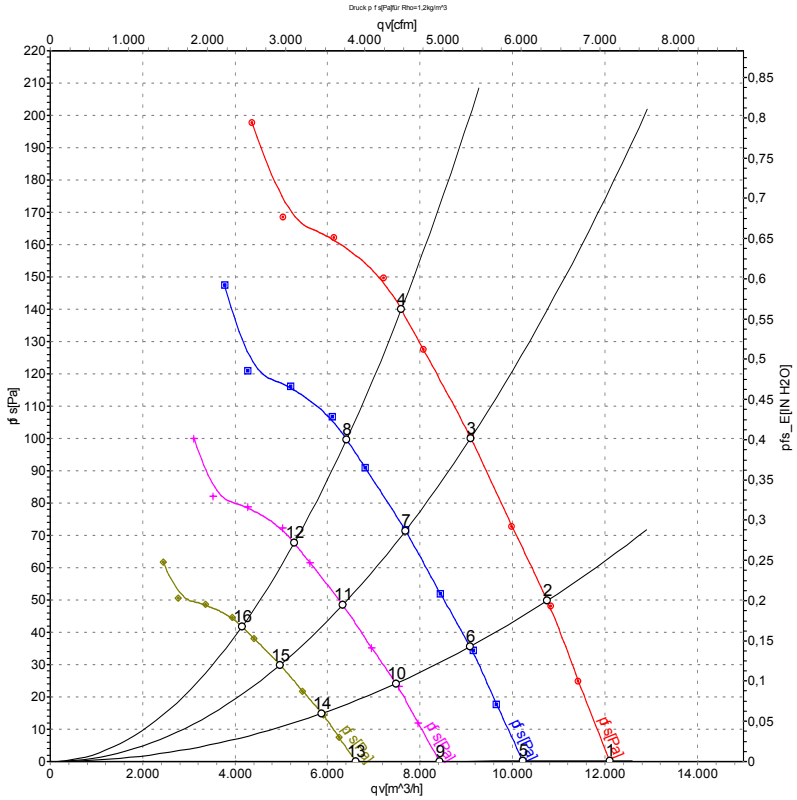

Measurement: LU-116825

Air performance measured as per ISO 5801 Installation category A. For detailed information on the measuring set-up, please contact ebm-papst. Suction-side noise levels: LwA measured as per ISO 13347 / LpA measured with 1m distance to fan axis. The values given are valid under the measuring conditions mentioned above and may vary according to the actual installation situation. With any deviation from the standard set-up, the specific values have to be checked and reviewed with the unit installed.

Measured values

	U	f	n	P_{ed}	I	LpA_{in}	LwA_{in}	LwA_{out}	qv	p_{fs}
	V	Hz	min^{-1}	W	A	dB(A)	dB(A)	dB(A)	m^3/h	Pa
1	230	50	1000	462	2.11	65	71	71	12100	0
2	230	50	1000	559	2.54	61	68	67	10750	50
3	230	50	1000	653	2.94	62	69	68	9100	100
4	230	50	1000	720	3.20	64	71	70	7595	140
5	230	50	850	279	1.27	61	67	67	10230	0
6	230	50	850	337	1.53	58	64	64	9085	36
7	230	50	850	394	1.77	59	65	64	7685	72
8	230	50	850	429	1.93	61	67	67	6415	100
9	230	50	700	156	0.71	57	63	63	8420	0
10	230	50	700	188	0.86	53	60	60	7480	24
11	230	50	700	220	0.99	55	61	60	6330	49
12	230	50	700	240	1.08	57	63	63	5280	68
13	230	50	550	76	0.35	52	58	58	6615	0
14	230	50	550	91	0.42	48	55	54	5880	15
15	230	50	550	107	0.48	49	56	55	4975	30
16	230	50	550	116	0.52	51	58	57	4150	42

U = Supply voltage · f = Frequency · n = Speed · P_{ed} = Power input · I = Current draw · LpA_{in} = Sound pressure level inlet side · LwA_{in} = Sound power level inlet side · LwA_{out} = Sound power level outlet side
qv = Air flow · p_{fs} = Pressure increase

ebm-papst Mulfingen GmbH & Co. KG · Bachmühle 2 · D-74673 Mulfingen · Phone +49 (0) 7938 81-0 · Fax +49 (0) 7938 81-110 · info1@de.ebmpapst.com · www.ebmpapst.com