W3G630-GU23-91

II 2 G Ex d e ib IIB T3 Gb

IBExU14ATEX1123 X /01

EC axial fan - HyBlade®

sickled blades (S series)

with full square nozzle

ebm-papst Mulfingen GmbH & Co. KG
Bachmühle 2 · D-74673 Mulfingen
Phone +49 7938 81-0
Fax +49 7938 81-110
info1@de.ebmpapst.com
www.ebmpapst.com

Limited partnership · Headquarters Mulfingen
County court Stuttgart · HRA 590344

General partner Elektrobau Mulfingen GmbH · Headquarters Mulfingen
County court Stuttgart · HRB 590142

Nominal data

Type	**W3G630-GU23-91**
Motor	**M3G150-IF**

Phase		3~
Nominal voltage	V	400
Nominal voltage range	V	380 .. 440
Frequency	Hz	50/60
Type of data definition		ml
State		prelim.
Speed	min^{-1}	1510
Power input	W	3130
Current draw	A	4.8
Max. back pressure	Pa	290
Min. ambient temperature	°C	-40
Max. ambient temperature	°C	60

ml = Max. load · me = Max. efficiency · fa = Running at free air · cs = Customer specs · cu = Customer unit
Subject to alterations

EC axial fan - HyBlade®

sickled blades (S series)

with full square nozzle

Technical features

Mass	46.5 kg
Size	630 mm
Surface of rotor	Coated in black
Material of electronics housing	Die-cast aluminium, coated in black
Material of blades	Aluminium sheet insert, sprayed with PP plastic
Material of wall ring	Sheet steel, galvanised and coated in black plastic (RAL 9005)
Material of guard grille	Steel, coated in black plastic (RAL9005)
Number of blades	5
Blade angle	0°
Direction of air flow	"V"
Direction of rotation	Clockwise, seen on rotor
Type of protection	IP 44
Insulation class	"F"
Humidity class	F4-1
Max. permissible ambient motor temp. (transp./ storage)	+80 °C
Min. permissible ambient motor temp. (transp./storage)	Transport -40 °C / Storage -55 °C °C
Mounting position	Shaft horizontal with cable outlet ±45° or rotor on bottom
Condensate discharge holes	Rotor-side
Operation mode	S1
Motor bearing	Ball bearing
Technical features	- Output 10 VDC, max. 10 mA - Output 20 VDC, max. 50 mA - Output for slave 0-10 V - Operation and alarm display - Input for sensor 0-10 V or 4-20 mA - External 24 V input (programming) - External release input - Alarm relay - Integrated PID controller - Motor current limit - PFC, passive - RS485 MODBUS RTU - Soft start - Control input 0-10 VDC / PWM - Temperature derating - Over-temperature protected electronics / motor - Line undervoltage / phase failure detection
Touch current acc. IEC 60990 (measuring network Fig. 4, TN system)	<= 3.5 mA
Electrical leads	Via terminal box
Motor protection	Reverse polarity and locked-rotor protection
Protection class	I (if protective earth is connected by customer)
Product conforming to standard	EN 61800-5-1; CE
Approval	II 2G; EAC

ebm-papst Mulfingen GmbH & Co. KG · Bachmühle 2 · D-74673 Mulfingen · Phone +49 (0) 7938 81-0 · Fax +49 (0) 7938 81-110 · info1@de.ebmpapst.com · www.ebmpapst.com

EC axial fan - HyBlade®

sickled blades (S series)

with full square nozzle

Product drawing

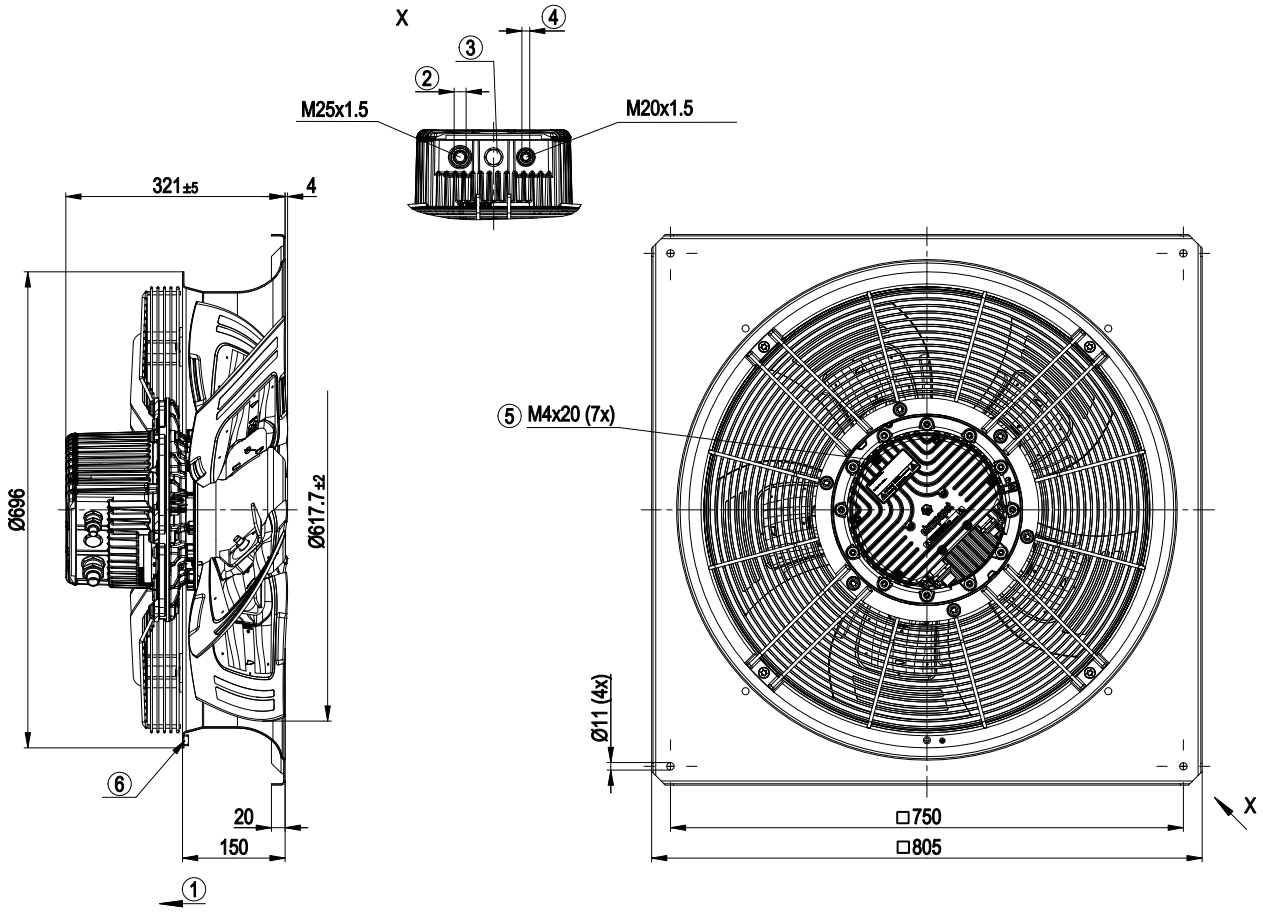

1	Direction of air flow "V"
2	Cable diameter min. 10 mm, max. 16 mm, tightening torque 6±0.6 Nm; standard value depending on cable
3	Screw plug M20x1.5
4	Cable diameter min. 10 mm, max. 14 mm, tightening torque 6±0.6 Nm; standard value depending on cable
5	Attachment screws for terminal box cover M4x20, tightening torque 3.5±0.5 Nm
6	Earth conductor connection point M8

ebm-papst Mulfingen GmbH & Co. KG · Bachmühle 2 · D-74673 Mulfingen · Phone +49 (0) 7938 81-0 · Fax +49 (0) 7938 81-110 · info1@de.ebmpapst.com · www.ebmpapst.com

Connection screen

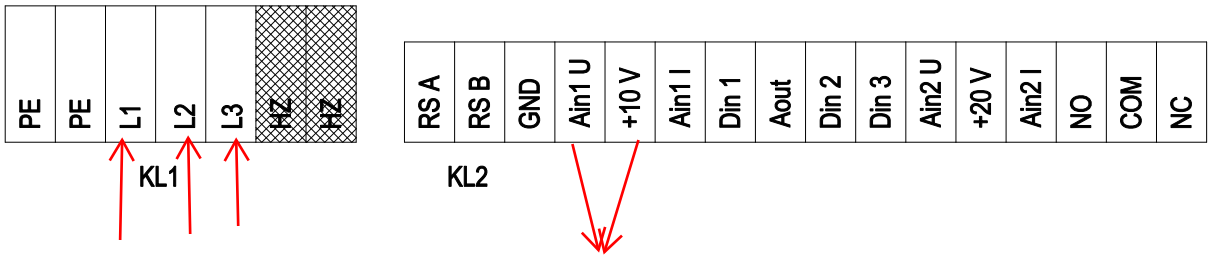

Shading => terminals not assigned

No.	Conn.	Designation	Function / assignment
1		PE	Earth connection, PE connection
1		L1	Mains supply connection, supply voltage 3-phase, 380- 440 VAC, 50/60 Hz
1		L2	Mains supply connection, supply voltage 3-phase, 380- 440 VAC, 50/60 Hz
1		L3	Mains supply connection, supply voltage 3-phase, 380- 440 VAC, 50/60 Hz
1		HZ	Connection of internal heating element; 24 V AC/DC; any polarity; max. startup current 30A
2		RSA	Bus connection RS485; RSA; MODBUS RTU; double terminal (SELV)
2		RSB	Bus connection RS485; RSB; MODBUS RTU; double terminal (SELV)
2		GND	Signal ground for control interface (SELV)
2		Ain1 U	Analogue input 1 (set value); 0 - 10 V; Ri = 100 kΩ; parametrisable curve; only usable as alternative to input Ain1 I (SELV)
2		+10 V	Fixed voltage output 10 VDC; +10 V ±3 %; max. 10 mA; short circuit proof; power supply for ext. devices (e.g. potentiometer) (SELV)
2		Ain1 I	Analogue input 1 (set value); 4 - 20 mA; Ri = 100 Ω; parametrisable curve; only usable as alternative to input Ain1 U (SELV)
2		Din 1	Digital input 1: enabling of electronics; enabling: open pin or applied voltage 5 to 50 VDC; disabling: bridge to GND or applied voltage < 1 VDC; reset function: triggers software reset after a level change to <1 V (SELV)
2		Aout	Analogue output 0 - 10 V; max. 5 mA; output of the current motor level control coefficient/ of the current motor speed. Parametrisable curve. (SELV)
2		Din 2	Digital input 2: parameter set switch 1/ 2; according to EEPROM setting, the valid/used parameter set is selectable per BUS or per digital input DIN 2. Parameter set 1: open pin or applied voltage 5 to 50 VDC; parameter set 2: bridge to GND or applied voltage < 1 VDC (SELV)
2		Din 3	Digital input 3: Control characteristic of the integrated controller; according to EEPROM setting, the control characteristic of the integrated controller is normally/inversely selectable per BUS or per digital input; normal: open pin or applied voltage 5 to 50 VDC (control deviation = actual sensor value - set value) inverse: bridge to GND or applied voltage < 1 VDC (control deviation = set value - actual sensor value) (SELV)
2		Ain2 U	Analogue input 2 (actual value); 0 - 10 V; Ri = 100 kΩ; parametrisable curve; only usable as alternative to input Ain2 I (SELV)
2		+20 V	Fixed voltage output 20 VDC; +20 V + 25 / - 10 %; max. 50 mA; short circuit proof; power supply for ext. devices (e.g. sensors) (SELV)
2		AIN2 I	Analogue input 2 (actual value); 4 - 20 mA; Ri = 100 Ω; parametrisable curve; only usable as alternative to input Ain2 U (SELV)
2		NO	Status relay; floating status contact; make for failure
2		COM	Status relay; floating status contact; changeover contact; common connection; contact rating 250 VAC / 2 A (AC1)
2		NC	Status relay; floating status contact; break for failure

ebm-papst Mulfingen GmbH & Co. KG · Bachmühle 2 · D-74673 Mulfingen · Phone +49 (0) 7938 81-0 · Fax +49 (0) 7938 81-110 · info1@de.ebmpapst.com · www.ebmpapst.com

Charts: Air flow 50 Hz

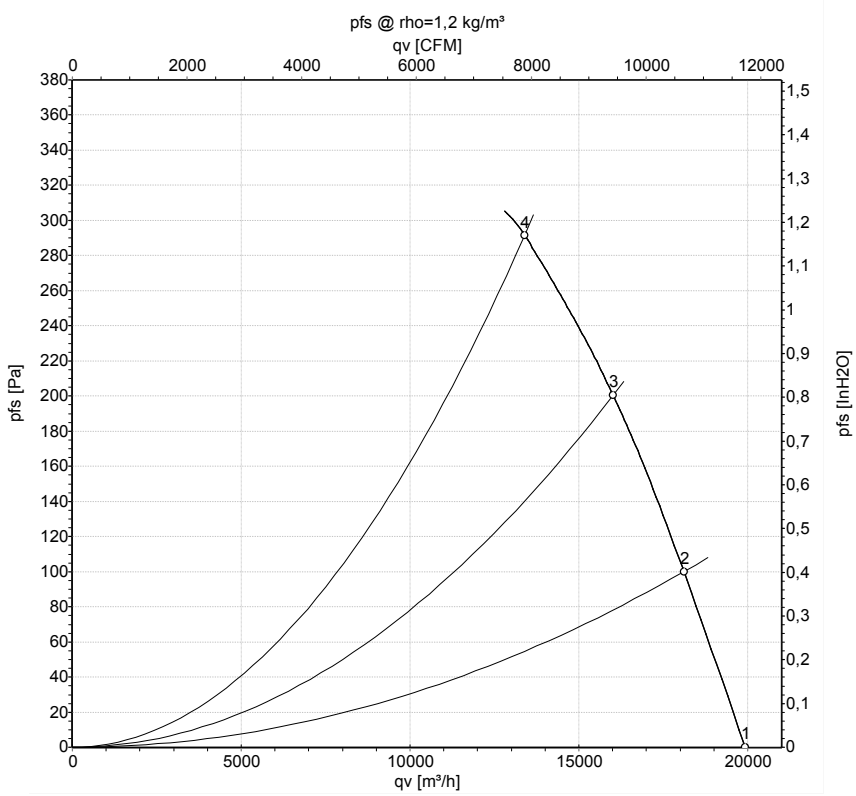

Measurement: LU-161764

Air performance measured as per ISO 5801 Installation category A. For detailed information on the measuring set-up, please contact ebm-papst. Suction-side noise levels: LwA measured as per ISO 13347 / LpA measured with 1m distance to fan axis. The values given are valid under the measuring conditions mentioned above and may vary according to the actual installation situation. With any deviation from the standard set-up, the specific values have to be checked and reviewed with the unit installed.

Measured values

	U	f	n	P_{ed}	I	LpA_{in}	LwA_{in}	LwA_{out}	qv	p_{fs}
	V	Hz	min^{-1}	W	A	dB(A)	dB(A)	dB(A)	m^3/h	Pa
1	400	50	1510	2731	4.10	77	84	85	19935	0
2	400	50	1510	2945	4.45	78	84	85	18115	100
3	400	50	1510	3087	4.71	80	86	86	16020	200
4	400	50	1510	3130	4.80	81	88	87	13400	290

U = Supply voltage · f = Frequency · n = Speed · P_{ed} = Power input · I = Current draw · LpA_{in} = Sound pressure level inlet side · LwA_{in} = Sound power level inlet side · LwA_{out} = Sound power level outlet side
qv = Air flow · p_{fs} = Pressure increase

ebm-papst Mulfingen GmbH & Co. KG · Bachmühle 2 · D-74673 Mulfingen · Phone +49 (0) 7938 81-0 · Fax +49 (0) 7938 81-110 · info1@de.ebmpapst.com · www.ebmpapst.com