W4D400-CP12-30

AC axial fan

sickled blades (S series)

with full round nozzle

ebm-papst Mulfingen GmbH & Co. KG
Bachmühle 2 · D-74673 Mulfingen
Phone +49 7938 81-0
Fax +49 7938 81-110
info1@de.ebmpapst.com
www.ebmpapst.com

Limited partnership · Headquarters Mulfingen
County court Stuttgart · HRA 590344

General partner Elektrobau Mulfingen GmbH · Headquarters Mulfingen
County court Stuttgart · HRB 590142

ErP2015 EXCEEDS THE NORM

Nominal data

Type	**W4D400-CP12-30**
Motor	**M4D074-EI**

Phase		3~	3~	3~	3~
Nominal voltage	VAC	230	230	400	400
Connection		Δ	Δ	Y	Y
Frequency	Hz	50	60	50	60
Type of data definition		fa	fa	fa	fa
Valid for approval / standard		CE	CE	CE	CE
Speed	min^{-1}	1450	1690	1450	1690
Power input	W	135	185	135	185
Current draw	A	0.76	0.68	0.44	0.39
Max. back pressure	Pa	150	120	150	120
Min. ambient temperature	°C	-25	-25	-25	-25
Max. ambient temperature	°C	40	40	40	40
Starting current	A	3.0	3.0	1.7	1.7

ml = max. load · me = max. efficiency · fa = running at free air · cs = customer specs · cu = customer unit
Subject to alterations

Data according to ErP directive

Installation category	A
Efficiency category	Static
Variable speed drive	No
Specific ratio*	1.00

* Specific ratio = 1 + p_{fs} / 100 000 Pa

		Actual	Request 2013	Request 2015
Overall efficiency η_{es}		32.7	25.1	29.1
Efficiency grade N		43.6	36	40
Power input P_e	kW	0.19		
Air flow q_v	m^3/h	2595		
Pressure increase p_{fs}	Pa	91		
Speed n	min^{-1}	1415		

Data established at point of optimum efficiency

AC axial fan

sickled blades (S series)

with full round nozzle

Technical features

Mass	8 kg
Size	400 mm
Material of electronics housing	Rotor: Coated in black
Material of impeller	Sheet steel, coated in black
Material of wall ring	Sheet steel, pre-galvanised and coated in black plastic
Material of guard grille	Steel, phosphated and coated in black plastic
Number of blades	5
Direction of air flow	"V"
Direction of rotation	Counter-clockwise, seen on rotor
Type of protection	IP 44; Depending on installation and position as per EN 60034-5
Insulation class	"B"
Humidity class	F1-2
Max. permissible ambient motor temp. (transp./ storage)	+ 80 °C
Min. permissible ambient motor temp. (transp./storage)	- 40 °C
Mounting position	Shaft horizontal or rotor on bottom; rotor on top on request
Condensate discharge holes	Rotor-side
Operation mode	S1
Motor bearing	Ball bearing
Touch current acc. IEC 60990 (measuring network Fig. 4, TN system)	< 0.75 mA
Cable exit	Variable
Protection class	I (if protective earth is connected by customer)
Approval	CCC

ebm-papst Mulfingen GmbH & Co. KG · Bachmühle 2 · D-74673 Mulfingen · Phone +49 (0) 7938 81-0 · Fax +49 (0) 7938 81-110 · info1@de.ebmpapst.com · www.ebmpapst.com

AC axial fan

sickled blades (S series)

with full round nozzle

Product drawing

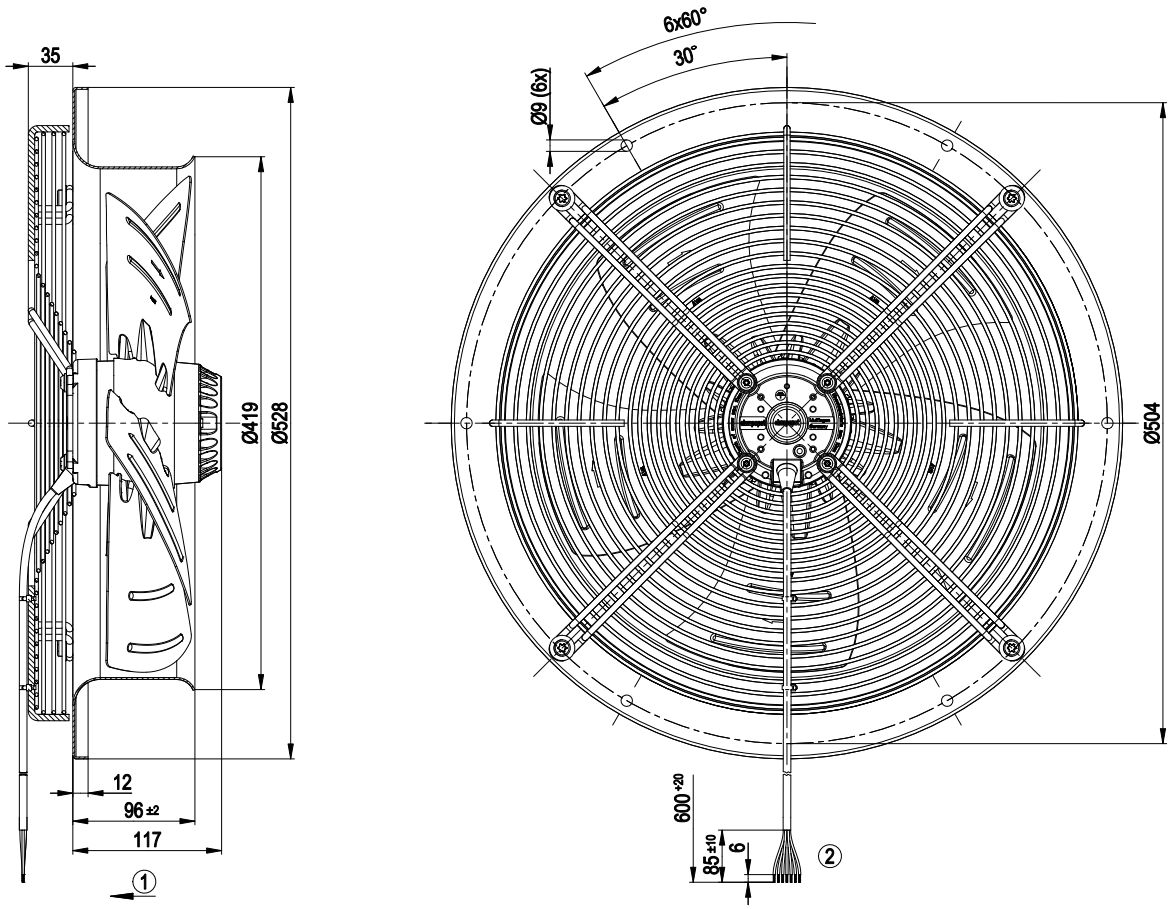

1	Direction of air flow "V"
2	Connection line PVC 7G 0.5 mm², 7x brass lead tips crimped

ebm-papst Mulfingen GmbH & Co. KG · Bachmühle 2 · D-74673 Mulfingen · Phone +49 (0) 7938 81-0 · Fax +49 (0) 7938 81-110 · info1@de.ebmpapst.com · www.ebmpapst.com

AC axial fan

sickled blades (S series)

with full round nozzle

Connection screen

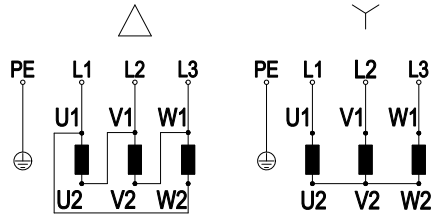

Note: Direction of rotation changes when two phases are reversed

Δ	Delta connection	Y	Star connection	L1	black
L2	blue	L3	brown	U1	black
V1	blue	W1	brown	U2	green
V2	white	W2	yellow	PE	green/yellow

ebm-papst Mulfingen GmbH & Co. KG · Bachmühle 2 · D-74673 Mulfingen · Phone +49 (0) 7938 81-0 · Fax +49 (0) 7938 81-110 · info1@de.ebmpapst.com · www.ebmpapst.com

W4D400-CP12-30

AC axial fan

sickled blades (S series)

with full round nozzle

Charts: Air flow 50 Hz

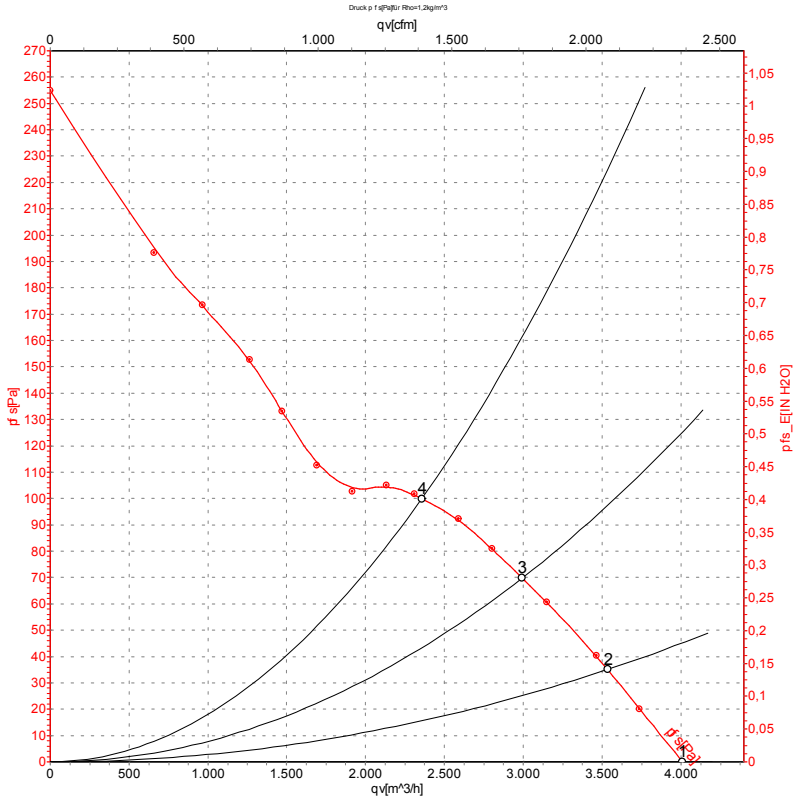

Measurement: LU-27622

Air performance measured as per ISO 5801 Installation category A. For detailed information on the measuring set-up, please contact ebm-papst. Suction-side noise levels: LwA measured as per ISO 13347 / LpA measured with 1m distance to fan axis. The values given are valid under the measuring conditions mentioned above and may vary according to the actual installation situation. With any deviation from the standard set-up, the specific values have to be checked and reviewed with the unit installed.

Measured values

	Conn.	U	f	n	P_e	I	LpA_{in}	LwA_{in}	qv	p_{fs}
		V	Hz	min^{-1}	W	A	dB(A)	dB(A)	m^3/h	Pa
1	Y	400	50	1450	135	0.44	65	74	4000	0
2	Y	400	50	1435	161	0.47	65	73	3535	35
3	Y	400	50	1420	182	0.49	65	72	2995	70
4	Y	400	50	1410	203	0.50	67	74	2355	100

Conn. = Connection · U = Supply voltage · f = Frequency · n = Speed · P_e = Power input · I = Current draw · LpA_{in} = Sound pressure level inlet side · LwA_{in} = Sound power level inlet side
qv = Air flow · p_{fs} = Pressure increase

ebm-papst Mulfingen GmbH & Co. KG · Bachmühle 2 · D-74673 Mulfingen · Phone +49 (0) 7938 81-0 · Fax +49 (0) 7938 81-110 · info1@de.ebmpapst.com · www.ebmpapst.com

AC axial fan

sickled blades (S series)

with full round nozzle

Charts: Air flow 60 Hz

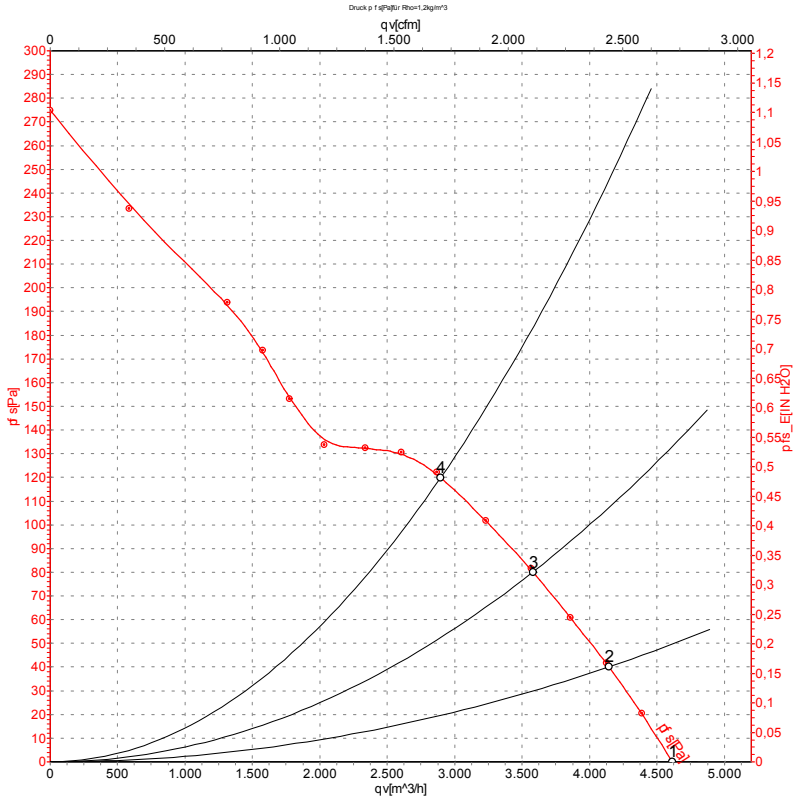

Measurement: LU-27623

Air performance measured as per ISO 5801 Installation category A. For detailed information on the measuring set-up, please contact ebm-papst. Suction-side noise levels: LwA measured as per ISO 13347 / LpA measured with 1m distance to fan axis. The values given are valid under the measuring conditions mentioned above and may vary according to the actual installation situation. With any deviation from the standard set-up, the specific values have to be checked and reviewed with the unit installed.

Measured values

	Conn.	U	f	n	P_e	I	LpA_{in}	LwA_{in}	qv	p_{fs}
		V	Hz	min^{-1}	W	A	dB(A)	dB(A)	m^3/h	Pa
1	Y	400	60	1690	185	0.39	69	76	4615	0
2	Y	400	60	1660	223	0.45	70	76	4145	40
3	Y	400	60	1635	256	0.49	69	76	3580	80
4	Y	400	60	1605	290	0.54	70	76	2895	120

Conn. = Connection · U = Supply voltage · f = Frequency · n = Speed · P_e = Power input · I = Current draw · LpA_{in} = Sound pressure level inlet side · LwA_{in} = Sound power level inlet side
qv = Air flow · p_{fs} = Pressure increase

ebm-papst Mulfingen GmbH & Co. KG · Bachmühle 2 · D-74673 Mulfingen · Phone +49 (0) 7938 81-0 · Fax +49 (0) 7938 81-110 · info1@de.ebmpapst.com · www.ebmpapst.com