W4D450-CG01-80

AC axial fan

sickled blades (S series)

with full round nozzle, Transformator fan

ebm-papst Mulfingen GmbH & Co. KG
Bachmühle 2 · D-74673 Mulfingen
Phone +49 7938 81-0
Fax +49 7938 81-110
info1@de.ebmpapst.com
www.ebmpapst.com

Limited partnership · Headquarters Mulfingen
County court Stuttgart · HRA 590344

General partner: Elektrobau Mulfingen GmbH · Headquarters Mulfingen
County court Stuttgart · HRB 590142

ErP2015 EXCEEDS THE NORM

Nominal data

Type	**W4D450-CG01-80**
Motor	**M4D110-EF**

Phase		3~	3~	3~	3~	3~	3~
Nominal voltage	VAC	400	400	400	400	480	480
Connection		**Δ**	Y	**Δ**	Y	**Δ**	Y
Frequency	Hz	50	50	60	60	60	60
Type of data definition		fa	fa	fa	fa	fa	fa
Valid for approval / standard		CE	CE	CE	CE	CE	CE
Speed	min^{-1}	1380	1150	1550	1140	1620	1305
Power input	W	410	295	605	375	640	460
Current draw	A	0.9	0.5	1.06	0.64	1.03	0.64
Max. back pressure	Pa	115	75	105	50	155	90
Max. ambient temperature	°C	95	95	60	60	60	60

ml = max. load · me = max. efficiency · fa = running at free air · cs = customer specs · cu = customer unit
Subject to alterations

Data according to ErP directive

Installation category	A
Efficiency category	Static
Variable speed drive integrated	No
Specific ratio*	1,00

* Specific ratio = 1 + p_{sf} / 100 000

		Actual	Request 2013	Request 2015
Overall efficiency η_e		31,8	27,7	31,7
Efficiency grade N		40,1	36	40
Power input P_e	kW	0,49		
Air flow q_v	m^3/h	4805		
Pressure increase Total p_{sf}	Pa	117		
Speed n	min^{-1}	1350		

Data established at point of optimum efficiency

AC axial fan

sickled blades (S series)

with full round nozzle, Transformator fan

Technical features

Mass	18 kg
Size	450 mm
Surface of rotor	Coated in black
Material of terminal box	Die-cast aluminium
Material of blades	Aluminium sheet, coated in black
Material of wall ring	Sheet steel, pre-galvanised and plastic-coated in white aluminium (RAL 9006)
Material of guard grille	Steel, galvanised and plastic-coated in white aluminium (RAL 9006)
Number of blades	5
Blade angle	0°
Direction of air flow	"A"
Direction of rotation	Clockwise, seen on rotor
Type of protection	IP 54
Insulation class	"F"
Humidity class	F4-2
Max. permissible ambient motor temp. (transp./ storage)	+ 80 °C
Min. permissible ambient motor temp. (transp./storage)	- 40 °C
Mounting position	Shaft horizontal or rotor on top; rotor on bottom on request
Condensate discharge holes	On the stator side
Operation mode	S1
Motor bearing	Ball bearing
Leakage current	<= 3.5 mA
Electrical leads	Via terminal box
Motor protection	Thermal overload protector (TOP) brought out
Cable exit	Axial
Protection class	I (if protective earth is connected by customer)
Product conforming to standard	EN 61800-5-1; CE

ebm-papst Mulfingen GmbH & Co. KG · Bachmühle 2 · D-74673 Mulfingen · Phone +49 7938 81-0 · Fax +49 7938 81-110 · info1@de.ebmpapst.com · www.ebmpapst.com

AC axial fan

sickled blades (S series)

with full round nozzle, Transformator fan

Product drawing

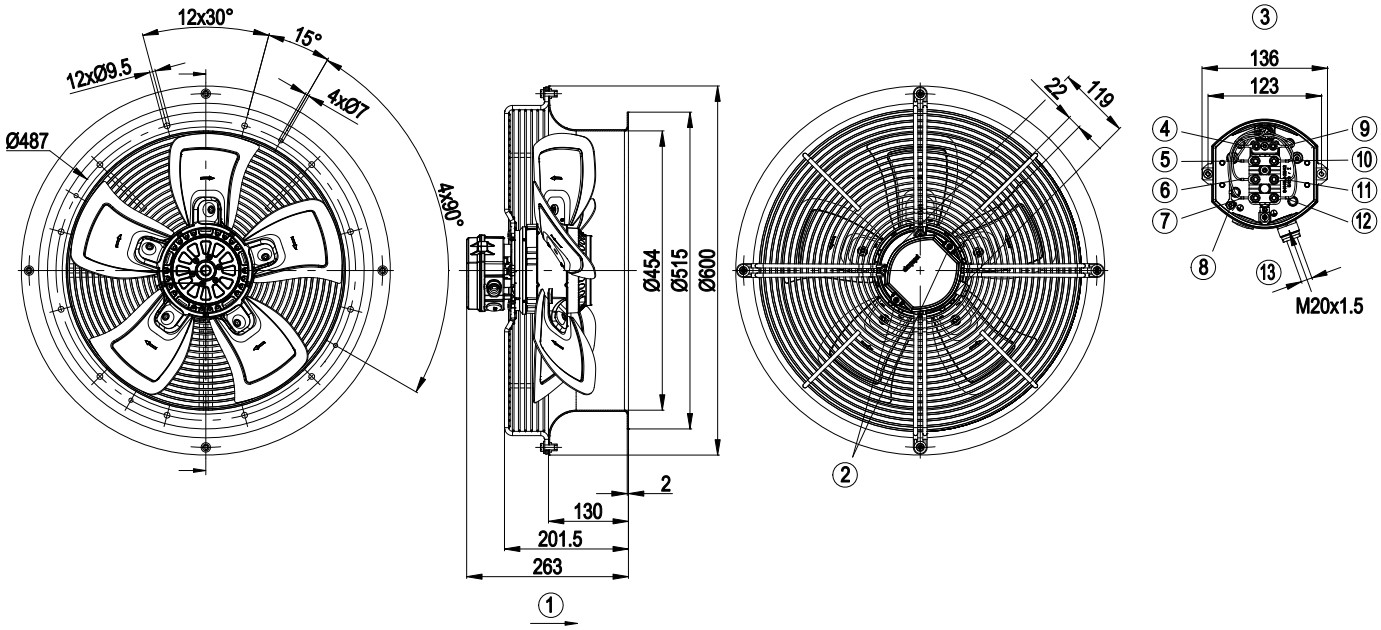

1	Direction of air flow "A"
2	Tightening torque 2.0 ± 0.2 Nm
3	Illustration without terminal box cover
4	grey
5	white
6	green
7	yellow
8	green/yellow
9	grey
10	brown
11	light blue
12	black
13	Cable diameter: min. 10 mm, max. 12 mm; tightening torque: 2.5 ± 0.3 Nm

ebm-papst Mulfingen GmbH & Co. KG · Bachmühle 2 · D-74673 Mulfingen · Phone +49 7938 81-0 · Fax +49 7938 81-110 · info1@de.ebmpapst.com · www.ebmpapst.com

AC axial fan

sickled blades (S series)

with full round nozzle, Transformator fan

Connection screen

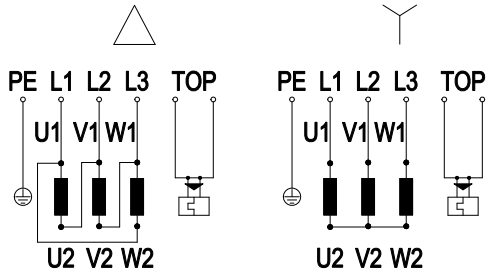

Note: Direction of rotation changes when two phases are reversed

Δ	Delta connection	Y	Star connection	L1	black
L2	blue	L3	brown	U1	black
V1	blue	W1	brown	U2	green
V2	white	W2	yellow	TOP	2xgrey
PE	green/yellow				

ebm-papst Mulfingen GmbH & Co. KG · Bachmühle 2 · D-74673 Mulfingen · Phone +49 7938 81-0 · Fax +49 7938 81-110 · info1@de.ebmpapst.com · www.ebmpapst.com

AC axial fan

sickled blades (S series)

with full round nozzle, Transformator fan

Charts: Air flow 50 Hz Δ

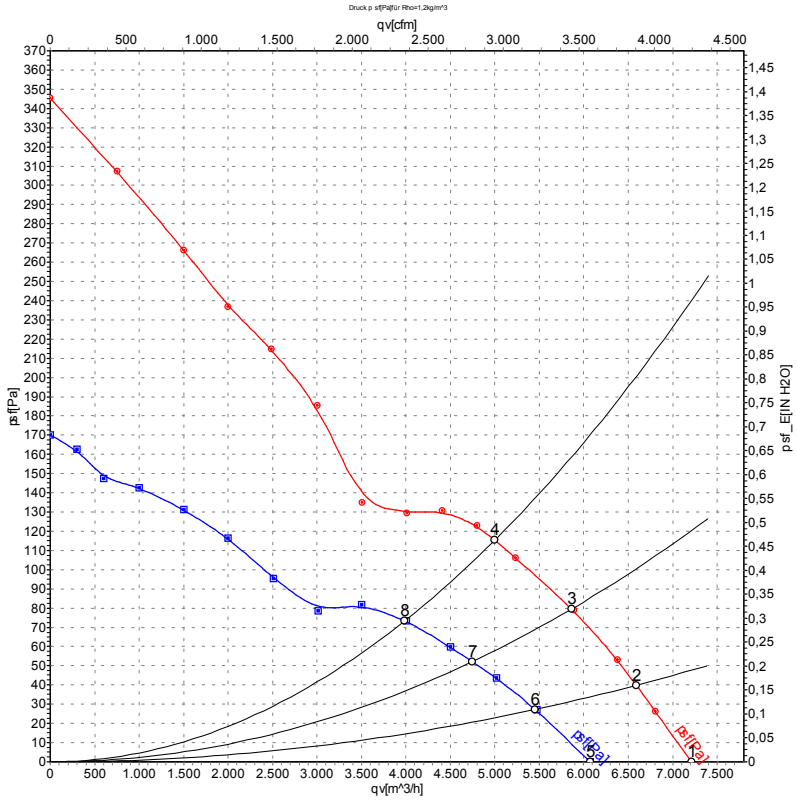

Measurement: LU-74752
Measurement: LU-74756

Air performance measured as per ISO 5801 Installation category A. For detailed information on the measuring set-up, please contact ebm-papst. Suction-side noise levels: LwA measured as per ISO 13347 / LpA measured with 1m distance to fan axis. The values given are valid under the measuring conditions mentioned above and may vary according to the actual installation situation. With any deviation from the standard set-up, the specific values have to be checked and reviewed with the unit installed.

Measured values

	Conn.	U	f	n	P_e	I	qv	p_{sf}
		V	Hz	min^{-1}	W	A	m^3/h	Pa
1	Δ	400	50	1380	410	0.90	7210	0
2	Δ	400	50	1370	442	0.94	6590	40
3	Δ	400	50	1360	469	0.97	5860	80
4	Δ	400	50	1350	490	1.00	5000	115
5	Y	400	50	1150	295	0.50	6070	0
6	Y	400	50	1125	316	0.53	5450	28
7	Y	400	50	1100	330	0.55	4745	52
8	Y	400	50	1075	340	0.58	3985	75

ebm-papst Mulfingen GmbH & Co. KG · Bachmühle 2 · D-74673 Mulfingen · Phone +49 7938 81-0 · Fax +49 7938 81-110 · info1@de.ebmpapst.com · www.ebmpapst.com

AC axial fan

sickled blades (S series)

with full round nozzle, Transformator fan

Charts: Air flow 60 Hz Δ

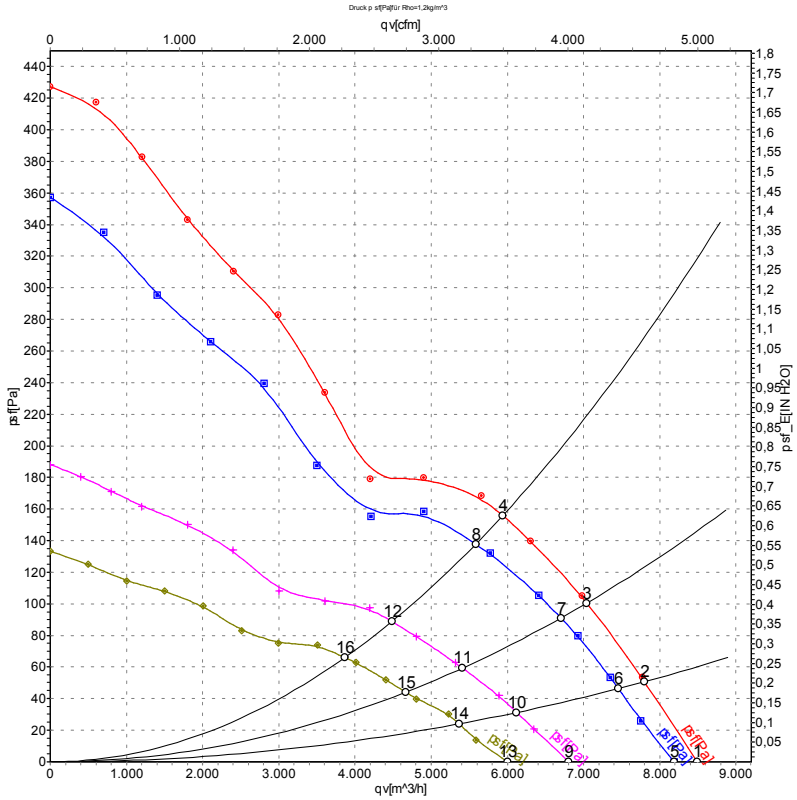

Measurement: LU-74754
Measurement: LU-74753
Measurement: LU-74759
Measurement: LU-74758

Air performance measured as per ISO 5801 Installation category A. For detailed information on the measuring set-up, please contact ebm-papst. Suction-side noise levels: LwA measured as per ISO 13347 / LpA measured with 1m distance to fan axis. The values given are valid under the measuring conditions mentioned above and may vary according to the actual installation situation. With any deviation from the standard set-up, the specific values have to be checked and reviewed with the unit installed.

Measured values

	Conn.	U	f	n	P_e	I	qv	p_{sf}
		V	Hz	min^{-1}	W	A	m^3/h	Pa
1	Δ	480	60	1620	640	1.03	8490	0
2	Δ	480	60	1605	711	1.11	7795	50
3	Δ	480	60	1590	754	1.15	7040	100
4	Δ	480	60	1575	800	1.20	5940	155
5	Δ	400	60	1550	605	1.06	8185	0
6	Δ	400	60	1525	647	1.11	7455	46
7	Δ	400	60	1505	687	1.17	6700	91
8	Δ	400	60	1495	700	1.20	5585	138
9	Y	480	60	1305	460	0.64	6805	0
10	Y	480	60	1260	485	0.68	6120	31
11	Y	480	60	1230	502	0.70	5410	59
12	Y	480	60	1195	520	0.75	4485	90
13	Y	400	60	1145	375	0.64	6000	0
14	Y	400	60	1095	388	0.67	5365	24
15	Y	400	60	1060	395	0.68	4665	44
16	Y	400	60	1045	400	0.69	3865	66

ebm-papst Mulfingen GmbH & Co. KG · Bachmühle 2 · D-74673 Mulfingen · Phone +49 7938 81-0 · Fax +49 7938 81-110 · info1@de.ebmpapst.com · www.ebmpapst.com