W4D450-CO14-02

AC axial fan

sickled blades (S series)

with full round nozzle

ebm-papst Mulfingen GmbH & Co. KG
Bachmühle 2 · D-74673 Mulfingen
Phone +49 7938 81-0
Fax +49 7938 81-110
info1@de.ebmpapst.com
www.ebmpapst.com

Limited partnership · Headquarters Mulfingen
County court Stuttgart · HRA 590344

General partner Elektrobau Mulfingen GmbH · Headquarters Mulfingen
County court Stuttgart · HRB 590142

ErP2015 EXCEEDS THE NORM

Nominal data

Type	**W4D450-CO14-02**
Motor	**M4D094-HA**

Phase		3~	3~	3~	3~	3~	3~
Nominal voltage	VAC	400	400	400	400	480	480
Connection		Δ	Y	Δ	Y	Δ	Y
Frequency	Hz	50	50	60	60	60	60
Type of data definition		ml	ml	ml	ml	ml	ml
Valid for approval / standard		CE	CE	CE	CE	CE	CE
Speed	min^{-1}	1360	1110	1510	1060	1600	1240
Power input	W	480	340	690	400	760	520
Current draw	A	0.98	0.58	1.2	0.72	1.17	0.75
Max. back pressure	Pa	140	90	145	70	160	95
Min. ambient temperature	°C	-40	-40	-40	-40	-40	-40
Max. ambient temperature	°C	65	65	50	50	50	50
Starting current	A	3.9	1.3	3.5	1.2		

ml = Max. load · me = Max. efficiency · fa = Running at free air · cs = Customer specs · cu = Customer unit
Subject to alterations

Data according to ErP directive

Installation category	A
Efficiency category	Static
Variable speed drive	No
Specific ratio*	1.00

* Specific ratio = 1 + p_{fs} / 100 000 Pa

		Actual	Request 2013	Request 2015
Overall efficiency η_{es}	%	35.4	27.5	31.5
Efficiency grade N		43.9	36	40
Power input P_e	kW	0.46		
Air flow q_v	m^3/h	4530		
Pressure increase p_{fs}	Pa	133		
Speed n	min^{-1}	1365		

Data definition with optimum efficiency. LU-107893
The ErP data is determined using a motor-impeller combination in a standardised measurement configuration.

ebmpapst

AC axial fan

sickled blades (S series)

with full round nozzle

Technical features

Mass	8.3 kg
Size	450 mm
Surface of rotor	Coated in black
Material of terminal box	ABS plastic, black
Material of blades	Press-fitted sheet steel blank, sprayed with PP plastic
Material of wall ring	Sheet steel, pre-galvanised and coated in black plastic
Material of guard grille	Steel, phosphated and coated in black plastic
Number of blades	5
Direction of air flow	"A"
Direction of rotation	Clockwise, seen on rotor
Type of protection	IP 54
Insulation class	"F"
Humidity class	F4-1
Max. permissible ambient motor temp. (transp./ storage)	+80 °C
Min. permissible ambient motor temp. (transp./storage)	-40 °C
Mounting position	Shaft horizontal or rotor on bottom; rotor on top on request
Condensate discharge holes	Rotor-side
Operation mode	S1
Motor bearing	Ball bearing
Touch current acc. IEC 60990 (measuring network Fig. 4, TN system)	<= 3.5 mA
Electrical leads	Via terminal box
Motor protection	Thermal overload protector (TOP) brought out
Protection class	I (if protective earth is connected by customer)
Product conforming to standard	EN 60034-1 (2004); CE
Approval	CCC; EAC

ebm-papst Mulfingen GmbH & Co. KG · Bachmühle 2 · D-74673 Mulfingen · Phone +49 (0) 7938 81-0 · Fax +49 (0) 7938 81-110 · info1@de.ebmpapst.com · www.ebmpapst.com

AC axial fan

sickled blades (S series)

with full round nozzle

Product drawing

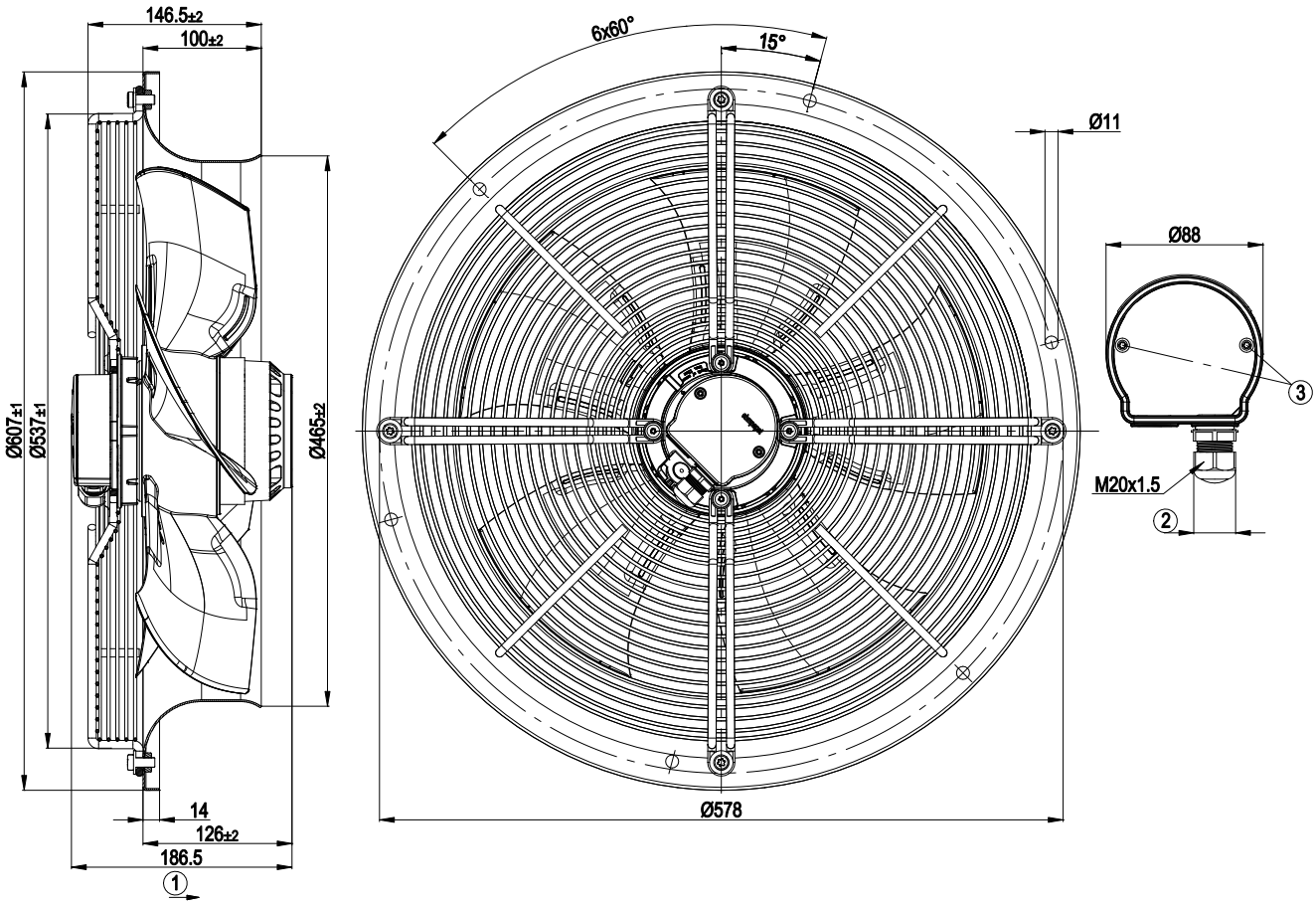

1	Direction of air flow "A"
2	Cable diameter: min. 6 mm, max. 12 mm; tightening torque: 2.0±0.15 Nm
3	Tightening torque 1.0 ± 0.15 Nm

ebm-papst Mulfingen GmbH & Co. KG · Bachmühle 2 · D-74673 Mulfingen · Phone +49 (0) 7938 81-0 · Fax +49 (0) 7938 81-110 · info1@de.ebmpapst.com · www.ebmpapst.com

AC axial fan

sickled blades (S series)

with full round nozzle

Connection screen

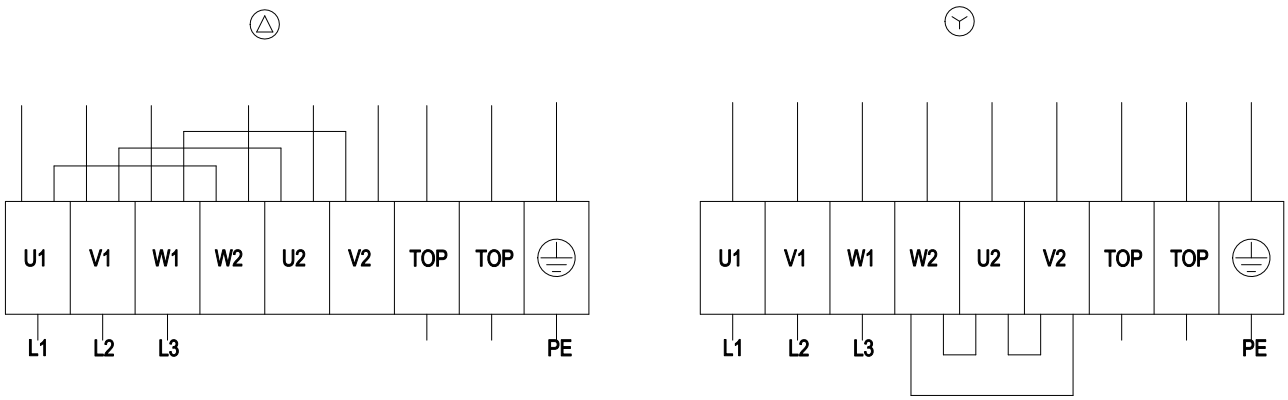

Δ	Delta-connection	Y	Star connection	L1	= U1 = black
L2	= V1 = blue	L3	= W1 = brown	W2	yellow
U2	green	V2	white	TOP	2 x grey
PE	green / yellow				

ebm-papst Mulfingen GmbH & Co. KG · Bachmühle 2 · D-74673 Mulfingen · Phone +49 (0) 7938 81-0 · Fax +49 (0) 7938 81-110 · info1@de.ebmpapst.com · www.ebmpapst.com

AC axial fan

sickled blades (S series)

with full round nozzle

Charts: Air flow 50 Hz

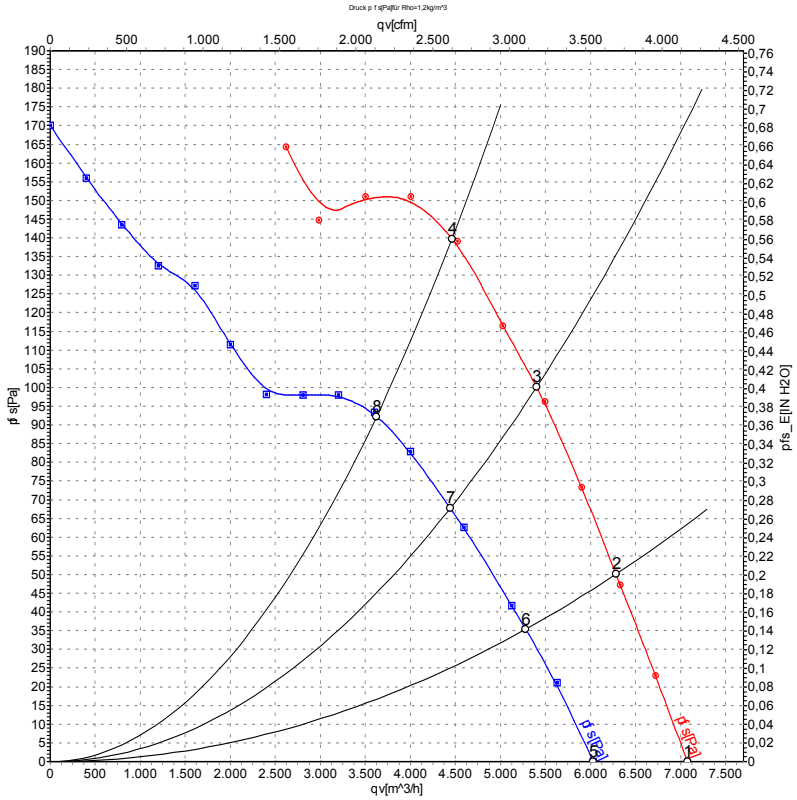

Air performance measured as per ISO 5801 Installation category A. For detailed information on the measuring set-up, please contact ebm-papst. Suction-side noise levels: LwA measured as per ISO 13347 / LpA measured with 1m distance to fan axis. The values given are valid under the measuring conditions mentioned above and may vary according to the actual installation situation. With any deviation from the standard set-up, the specific values have to be checked and reviewed with the unit installed.

Measured values

	Conn.	U	f	n	P_e	I	LpA_{in}	LwA_{in}	LwA_{out}	qv	p_{fs}
		V	Hz	min^{-1}	W	A	dB(A)	dB(A)	dB(A)	m^3/h	Pa
1	Δ	400	50	1400	386	0.88	65	71		7080	0
2	Δ	400	50	1385	422	0.91	62	68		6285	50
3	Δ	400	50	1370	453	0.95	61	68		5400	100
4	Δ	400	50	1360	480	0.98	62	68		4460	140
5	Y	400	50	1195	285	0.49	63	68	69	6030	0
6	Y	400	50	1160	308	0.52	59	65	65	5280	35
7	Y	400	50	1130	326	0.55	57	64	64	4445	68
8	Y	400	50	1110	340	0.58	57	64	64	3625	93

Conn. = Connection · U = Supply voltage · f = Frequency · n = Speed · P_e = Power input · I = Current draw · LpA_{in} = Sound pressure level inlet side · LwA_{in} = Sound power level inlet side
LwA_{out} = Sound power level outlet side · qv = Air flow · p_{fs} = Pressure increase

ebm-papst Mulfingen GmbH & Co. KG · Bachmühle 2 · D-74673 Mulfingen · Phone +49 (0) 7938 81-0 · Fax +49 (0) 7938 81-110 · info1@de.ebmpapst.com · www.ebmpapst.com

AC axial fan

sickled blades (S series)

with full round nozzle

Charts: Air flow 60 Hz

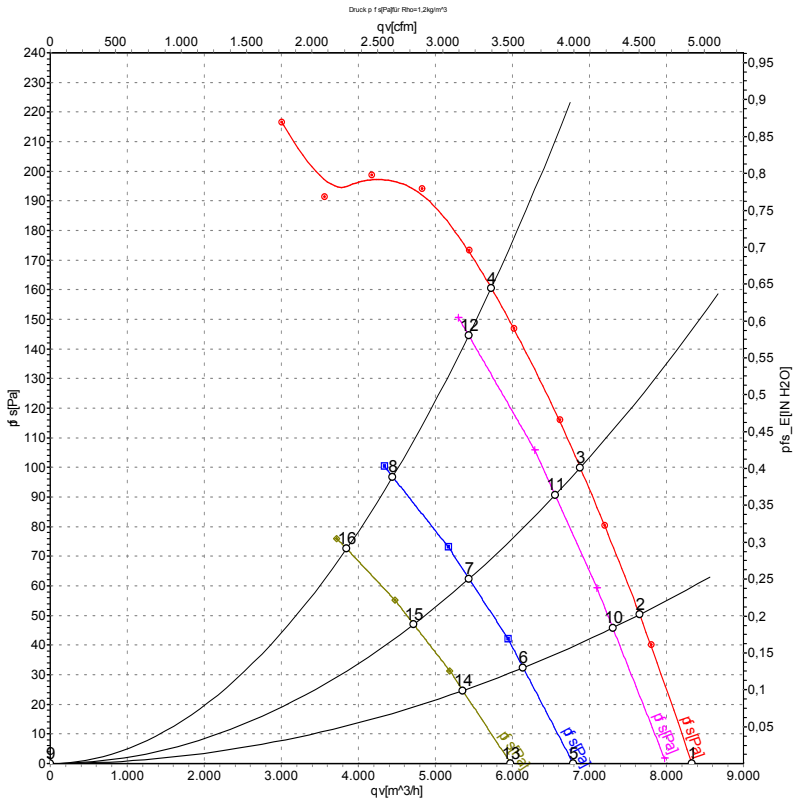

Air performance measured as per ISO 5801 Installation category A. For detailed information on the measuring set-up, please contact ebm-papst. Suction-side noise levels: LwA measured as per ISO 13347 / LpA measured with 1m distance to fan axis. The values given are valid under the measuring conditions mentioned above and may vary according to the actual installation situation. With any deviation from the standard set-up, the specific values have to be checked and reviewed with the unit installed.

Measured values

	Conn.	U	f	n	P_e	I	LpA_{in}	LwA_{in}	LwA_{out}	qv	p_{fs}
		V	Hz	min^{-1}	W	A	dB(A)	dB(A)	dB(A)	m^3/h	Pa
1	Δ	480	60	1645	628	1.03	68	74	76	8330	0
2	Δ	480	60	1630	674	1.08	66	72	74	7650	50
3	Δ	480	60	1615	715	1.12	65	71	73	6880	100
4	Δ	480	60	1600	760	1.17	65	72	72	5725	160
5	Y	480	60	1335	459	0.66	64	70	71	6790	0
6	Y	480	60	1300	480	0.69	61	67	68	6140	32
7	Y	480	60	1265	498	0.72	60	66	67	5435	62
8	Y	480	60	1240	520	0.75	59	65	65	4445	97
9	Δ	400	60	1575	580	1.02	67	73	74	0	0
10	Δ	400	60	1550	620	1.09	65	71	73	7305	46
11	Δ	400	60	1530	657	1.15	64	70	71	6555	91
12	Δ	400	60	1510	690	1.20	64	70	71	5435	145
13	Y	400	60	1175	375	0.65	62	67	68	5980	0
14	Y	400	60	1130	388	0.68	59	64	65	5355	25
15	Y	400	60	1095	398	0.70	57	63	63	4720	47
16	Y	400	60	1060	400	0.72	56	62	62	3845	72

Conn. = Connection · U = Supply voltage · f = Frequency · n = Speed · P_e = Power input · I = Current draw · LpA_{in} = Sound pressure level inlet side · LwA_{in} = Sound power level inlet side
LwA_{out} = Sound power level outlet side · qv = Air flow · p_{fs} = Pressure increase

ebm-papst Mulfingen GmbH & Co. KG · Bachmühle 2 · D-74673 Mulfingen · Phone +49 (0) 7938 81-0 · Fax +49 (0) 7938 81-110 · info1@de.ebmpapst.com · www.ebmpapst.com