W4D450-CU01-01

AC axial fan - HyBlade

sickled blades (S series)

with full round nozzle

ebm-papst Mulfingen GmbH & Co. KG
Bachmühle 2 · D-74673 Mulfingen
Phone +49 7938 81-0
Fax +49 7938 81-110
info1@de.ebmpapst.com
www.ebmpapst.com

Limited partnership · Headquarters Mulfingen
County court Stuttgart · HRA 590344

General partner Elektrobau Mulfingen GmbH · Headquarters Mulfingen
County court Stuttgart · HRB 590142

ErP2015 EXCEEDS THE NORM

Nominal data

Type	**W4D450-CU01-01**
Motor	**M4D094-EA**

Phase		3~	3~	3~	3~
Nominal voltage	VAC	400	400	400	400
Connection		Δ	Y	Δ	Y
Frequency	Hz	50	50	60	60
Type of data definition		ml	ml	ml	ml
Valid for approval / standard		CE	CE	CE	CE
Speed	min^{-1}	1250	875	1360	860
Power input	W	340	200	415	205
Current draw	A	0.61	0.33	0.70	0.35
Max. back pressure	Pa	120	60	85	35
Min. ambient temperature	°C	-40	-40	-40	-40
Max. ambient temperature	°C	60	60	50	50
Starting current	A	1.7	0.55	1.57	0.51

ml = Max. load · me = Max. efficiency · fa = Running at free air · cs = Customer specs · cu = Customer unit
Subject to alterations

Data according to ErP directive

		Actual	Request 2015
01 Overall efficiency η_{es}	%	32	30.4
02 Measurement category		A	
03 Efficiency category		Static	
04 Efficiency grade N		41.6	40
05 Variable speed drive		No	

09 Power input P_e	kW	0.3
09 Air flow q_v	m^3/h	3610
09 Pressure increase p_{fs}	Pa	96
10 Speed n	min^{-1}	1285
11 Specific ratio*		1.00

Data definition with optimum efficiency.
The ErP data is determined using a motor-impeller combination in a standardised measurement configuration.

* Specific ratio = 1 + p_{fs} / 100 000 Pa

LU-72632

AC axial fan - HyBlade

sickled blades (S series)

with full round nozzle

Technical features

Mass	9.4 kg
Size	450 mm
Surface of rotor	Coated in black
Material of terminal box	ABS plastic
Material of blades	Press-fitted sheet steel blank, sprayed with PP plastic
Material of wall ring	Sheet steel, pre-galvanised and coated in black plastic (RAL 9005)
Material of guard grille	Steel, coated in black plastic (RAL9005)
Number of blades	5
Direction of air flow	"V"
Direction of rotation	Counter-clockwise, seen on rotor
Type of protection	IP 54
Insulation class	"F"
Humidity class	F4-1
Max. permissible ambient motor temp. (transp./ storage)	+80 °C
Min. permissible ambient motor temp. (transp./storage)	-40 °C
Mounting position	Shaft horizontal or rotor on bottom; rotor on top on request
Condensate discharge holes	Rotor-side
Motor bearing	Ball bearing
Touch current acc. IEC 60990 (measuring network Fig. 4, TN system)	<= 3.5 mA
Electrical leads	Via terminal box
Motor protection	Thermal overload protector (TOP) brought out
Protection class	I (if protective earth is connected by customer)
Product conforming to standard	EN 60034-1 (2010); CE
Approval	CCC; EAC

ebm-papst Mulfingen GmbH & Co. KG · Bachmühle 2 · D-74673 Mulfingen · Phone +49 (0) 7938 81-0 · Fax +49 (0) 7938 81-110 · info1@de.ebmpapst.com · www.ebmpapst.com

AC axial fan - HyBlade

sickled blades (S series)

with full round nozzle

Product drawing

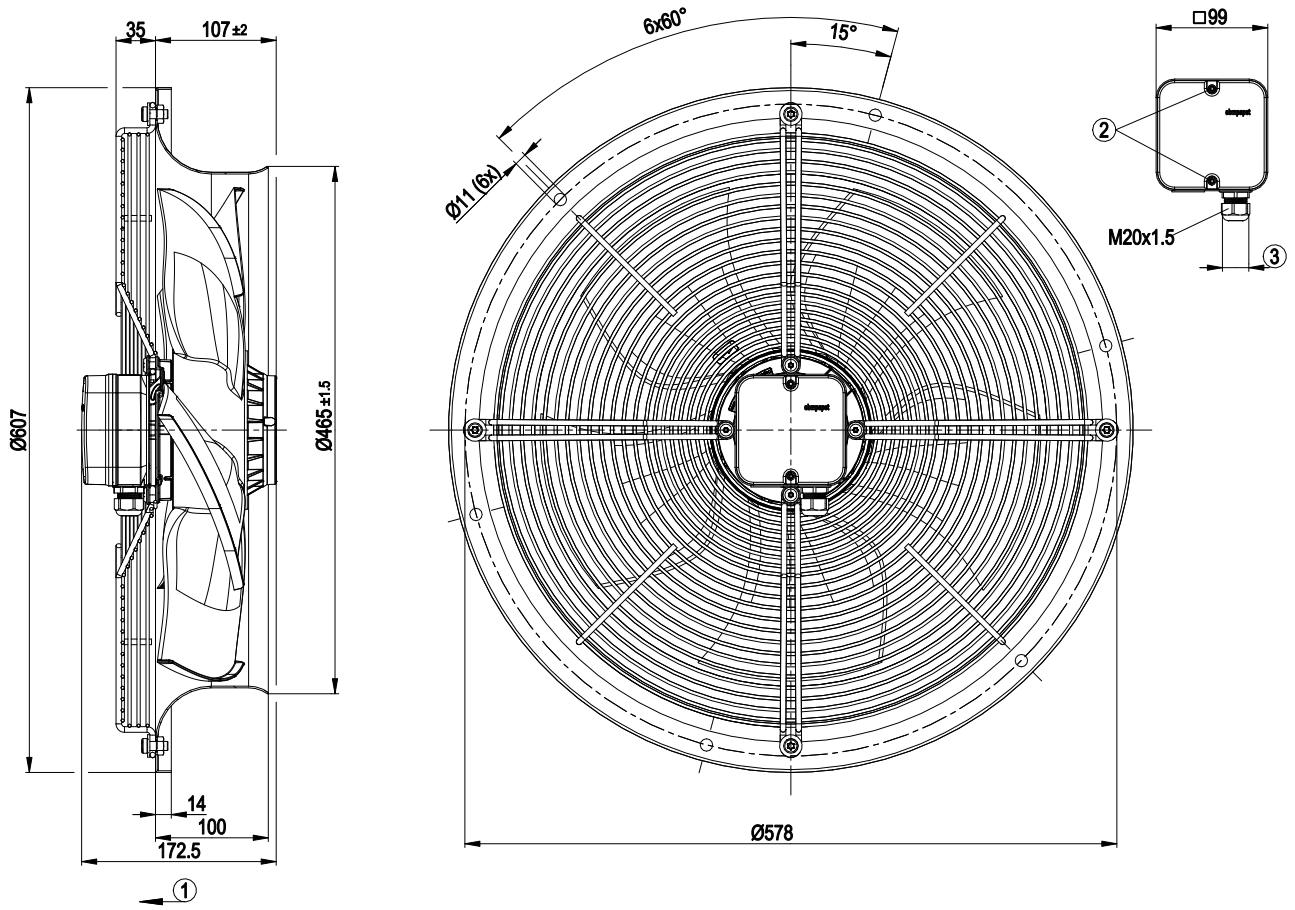

1	Direction of air flow "V"
2	Tightening torque 0.8±0.15 Nm
3	Cable diameter: min. 6 mm, max. 12 mm, tightening torque: 2±0.3 Nm

ebm-papst Mulfingen GmbH & Co. KG · Bachmühle 2 · D-74673 Mulfingen · Phone +49 (0) 7938 81-0 · Fax +49 (0) 7938 81-110 · info1@de.ebmpapst.com · www.ebmpapst.com

AC axial fan - HyBlade

sickled blades (S series)

with full round nozzle

Connection screen

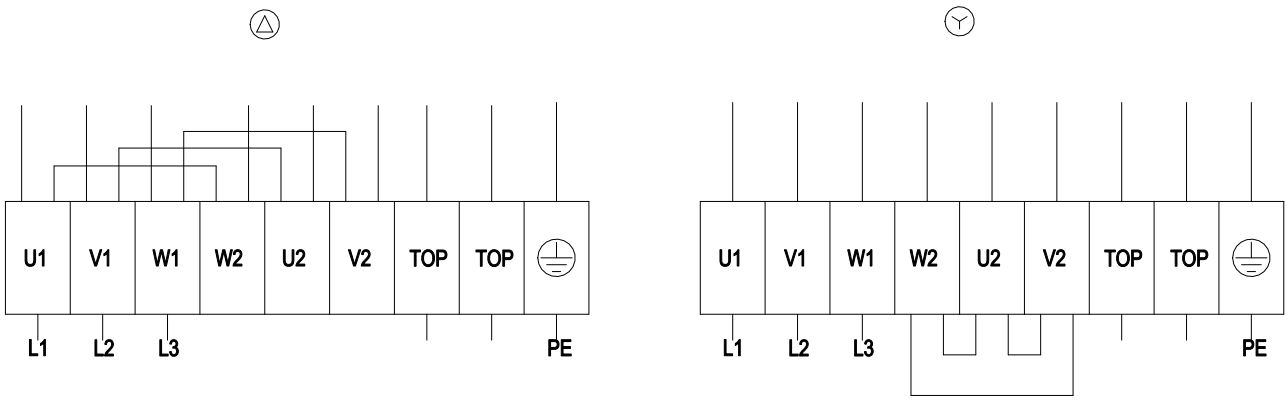

Δ	Delta-connection	Y	Star connection	L1	= U1 = black
L2	= V1 = blue	L3	= W1 = brown	W2	yellow
U2	green	V2	white	TOP	2 x grey
PE	green / yellow				

ebm-papst Mulfingen GmbH & Co. KG · Bachmühle 2 · D-74673 Mulfingen · Phone +49 (0) 7938 81-0 · Fax +49 (0) 7938 81-110 · info1@de.ebmpapst.com · www.ebmpapst.com

AC axial fan - HyBlade

sickled blades (S series)

with full round nozzle

Charts: Air flow 50 Hz

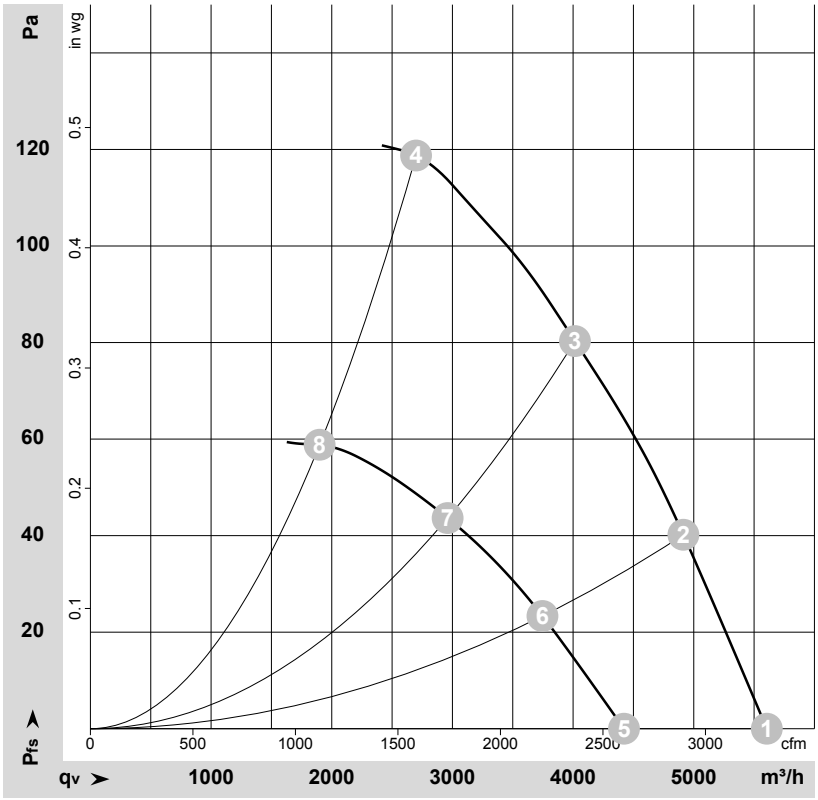

ρ = 1,15 kg/m³ ± 2%

Measurement: LU-72632
Measurement: LU-72634

Air performance measured as per ISO 5801 Installation category A. For detailed information on the measuring set-up, please contact ebm-papst. Suction-side noise levels: LwA measured as per ISO 13347 / LpA measured with 1m distance to fan axis. The values given are valid under the measuring conditions mentioned above and may vary according to the actual installation situation. With any deviation from the standard set-up, the specific values have to be checked and reviewed with the unit installed.

Measured values

	Conn.	U	f	n	P_e	I	qv	p_{fs}
		V	Hz	min^{-1}	W	A	m^3/h	Pa
1	Δ	400	50	1350	231	0.49	5605	0
2	Δ	400	50	1320	264	0.53	4915	40
3	Δ	400	50	1295	293	0.56	4015	80
4	Δ	400	50	1250	340	0.61	2700	120
5	Y	400	50	1070	160	0.27	4420	0
6	Y	400	50	1015	173	0.29	3745	23
7	Y	400	50	960	183	0.31	2960	44
8	Y	400	50	875	200	0.33	1900	59

Conn. = Connection · U = Supply voltage · f = Frequency · n = Speed · P_e = Power input · I = Current draw · qv = Air flow · p_{fs} = Pressure increase

ebm-papst Mulfingen GmbH & Co. KG · Bachmühle 2 · D-74673 Mulfingen · Phone +49 (0) 7938 81-0 · Fax +49 (0) 7938 81-110 · info1@de.ebmpapst.com · www.ebmpapst.com

AC axial fan - HyBlade

sickled blades (S series)

with full round nozzle

Charts: Air flow 60 Hz

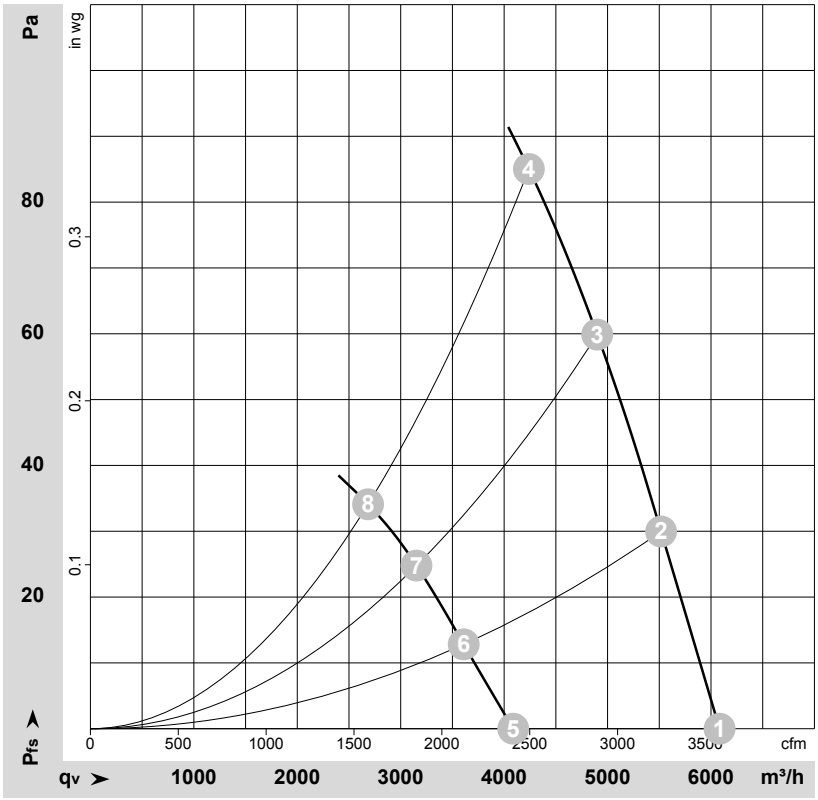

ρ = 1,15 kg/m³ ± 2%

Measurement: LU-72642
Measurement: LU-72646

Air performance measured as per ISO 5801 Installation category A. For detailed information on the measuring set-up, please contact ebm-papst. Suction-side noise levels: LwA measured as per ISO 13347 / LpA measured with 1m distance to fan axis. The values given are valid under the measuring conditions mentioned above and may vary according to the actual installation situation. With any deviation from the standard set-up, the specific values have to be checked and reviewed with the unit installed.

Measured values

	Conn.	U	f	n	P_e	I	qv	p_{fs}
		V	Hz	min^{-1}	W	A	m^3/h	Pa
1	Δ	400	60	1455	334	0.57	6085	0
2	Δ	400	60	1415	360	0.61	5520	30
3	Δ	400	60	1380	384	0.64	4900	60
4	Δ	400	60	1360	415	0.70	4240	85
5	Y	400	60	990	187	0.31	4090	0
6	Y	400	60	935	192	0.32	3610	13
7	Y	400	60	895	197	0.33	3150	25
8	Y	400	60	860	205	0.35	2685	34

Conn. = Connection · U = Supply voltage · f = Frequency · n = Speed · P_e = Power input · I = Current draw · qv = Air flow · p_{fs} = Pressure increase

ebm-papst Mulfingen GmbH & Co. KG · Bachmühle 2 · D-74673 Mulfingen · Phone +49 (0) 7938 81-0 · Fax +49 (0) 7938 81-110 · info1@de.ebmpapst.com · www.ebmpapst.com