W4D450-CU01-02

AC axial fan

sickled blades (S series)

with full round nozzle

ebm-papst Mulfingen GmbH & Co. KG
Bachmühle 2 · D-74673 Mulfingen
Phone +49 7938 81-0
Fax +49 7938 81-110
info1@de.ebmpapst.com
www.ebmpapst.com

Limited partnership · Headquarters Mulfingen
County court Stuttgart · HRA 590344

General partner Elektrobau Mulfingen GmbH · Headquarters Mulfingen
County court Stuttgart · HRB 590142

ErP2015 EXCEEDS THE NORM

Nominal data

Type	**W4D450-CU01-02**
Motor	**M4D094-EA**

Phase		3~	3~	3~	3~
Nominal voltage	VAC	400	400	400	400
Connection		Δ	Y	Δ	Y
Frequency	Hz	50	50	60	60
Type of data definition		ml	ml	ml	ml
Valid for approval / standard		CE	CE	CE	CE
Speed	min^{-1}	1250	875	1360	860
Power input	W	340	200	415	205
Current draw	A	0.61	0.33	0.70	0.35
Max. back pressure	Pa	120	60	85	35
Min. ambient temperature	°C	-40	-40	-40	-40
Max. ambient temperature	°C	60	60	50	50
Starting current	A	1.7	0.55	1.57	0.51

ml = Max. load · me = Max. efficiency · fa = Running at free air · cs = Customer specs · cu = Customer unit
Subject to alterations

Data according to ErP directive

Installation category	A
Efficiency category	Static
Variable speed drive	No
Specific ratio*	1.00

* Specific ratio = 1 + p_{fs} / 100 000 Pa

		Actual	Request 2013	Request 2015
Overall efficiency η_{es}	%	32	26.4	30.4
Efficiency grade N		41.6	36	40
Power input P_e	kW	0.3		
Air flow q_v	m^3/h	3610		
Pressure increase p_{fs}	Pa	96		
Speed n	min^{-1}	1285		

Data definition with optimum efficiency. LU-72632
The ErP data is determined using a motor-impeller combination in a standardised measurement configuration.

AC axial fan

sickled blades (S series)

with full round nozzle

Technical features

Mass	6.0 kg
Size	450 mm
Surface of rotor	Coated in black
Material of terminal box	ABS plastic, black
Material of impeller	PP-GF40 plastic
Material of wall ring	Sheet steel, pre-galvanised and coated in black plastic
Material of guard grille	Steel, phosphated and coated in black plastic
Number of blades	5
Direction of air flow	"A"
Direction of rotation	Clockwise, seen on rotor
Type of protection	IP 54
Insulation class	"F"
Humidity class	F4-1
Max. permissible ambient motor temp. (transp./ storage)	+80 °C
Min. permissible ambient motor temp. (transp./storage)	-40 °C
Mounting position	Shaft horizontal or rotor on bottom; rotor on top on request
Condensate discharge holes	Rotor-side
Operation mode	S1
Motor bearing	Ball bearing
Touch current acc. IEC 60990 (measuring network Fig. 4, TN system)	<= 3.5 mA
Electrical leads	Via terminal box
Motor protection	Thermal overload protector (TOP) brought out
Protection class	I (if protective earth is connected by customer)
Product conforming to standard	CE
Approval	CCC; EAC

ebm-papst Mulfingen GmbH & Co. KG · Bachmühle 2 · D-74673 Mulfingen · Phone +49 (0) 7938 81-0 · Fax +49 (0) 7938 81-110 · info1@de.ebmpapst.com · www.ebmpapst.com

AC axial fan

sickled blades (S series)

with full round nozzle

Product drawing

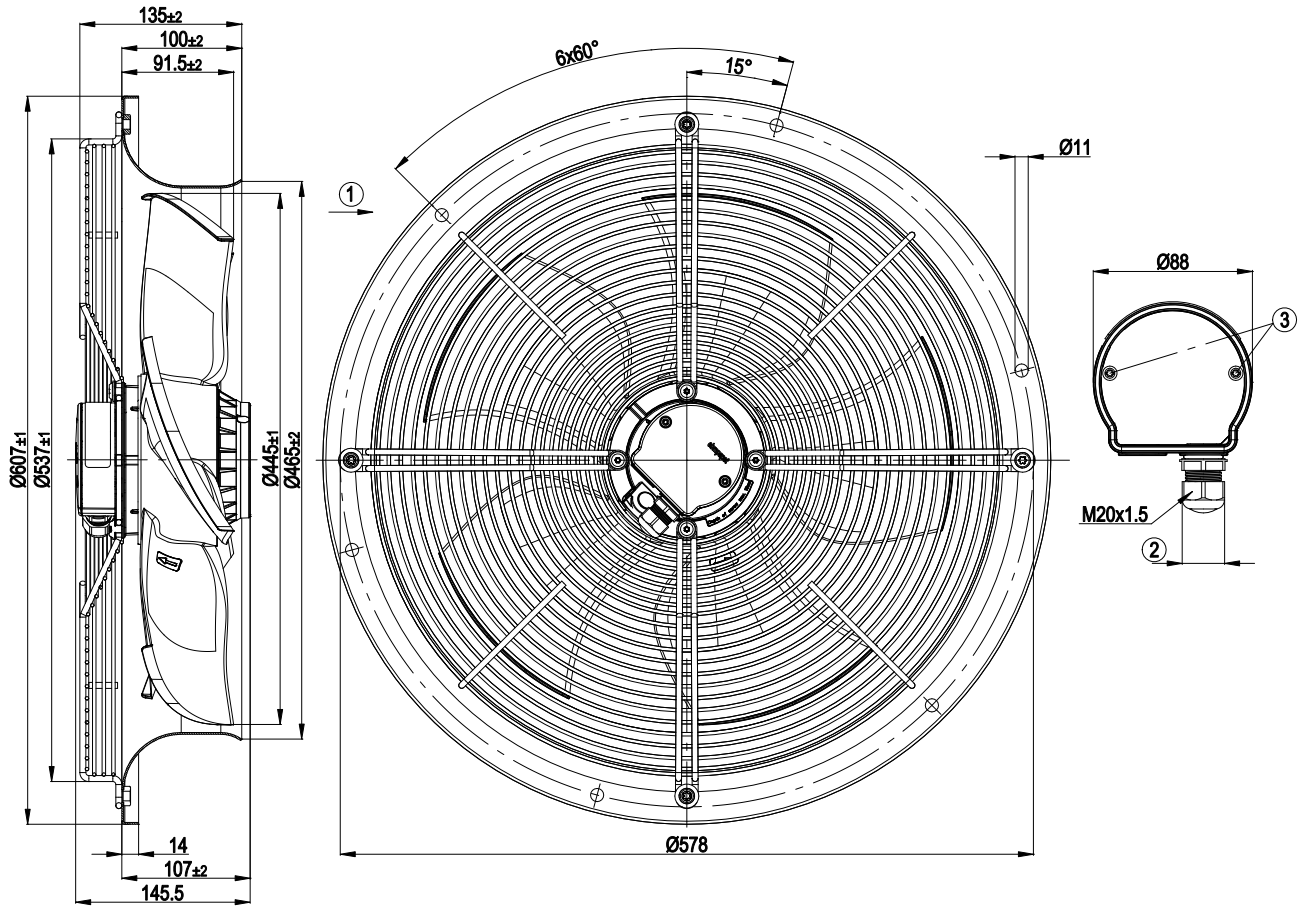

1	Direction of air flow "A"
2	Cable diameter: min. 6 mm, max. 12 mm, tightening torque: 2.0 Nm
3	Tightening torque 1.0 ± 0.15 Nm

ebm-papst Mulfingen GmbH & Co. KG · Bachmühle 2 · D-74673 Mulfingen · Phone +49 (0) 7938 81-0 · Fax +49 (0) 7938 81-110 · info1@de.ebmpapst.com · www.ebmpapst.com

AC axial fan

sickled blades (S series)

with full round nozzle

Connection screen

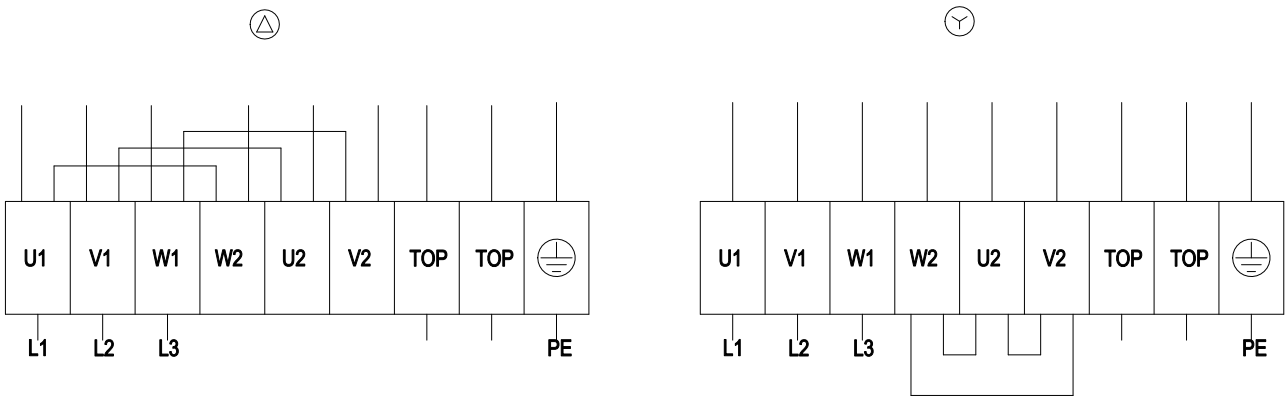

Δ	Delta-connection	Y	Star connection	L1	= U1 = black
L2	= V1 = blue	L3	= W1 = brown	W2	yellow
U2	green	V2	white	TOP	2 x grey
PE	green / yellow				

ebm-papst Mulfingen GmbH & Co. KG · Bachmühle 2 · D-74673 Mulfingen · Phone +49 (0) 7938 81-0 · Fax +49 (0) 7938 81-110 · info1@de.ebmpapst.com · www.ebmpapst.com

AC axial fan

sickled blades (S series)

with full round nozzle

Charts: Air flow 50 Hz Δ

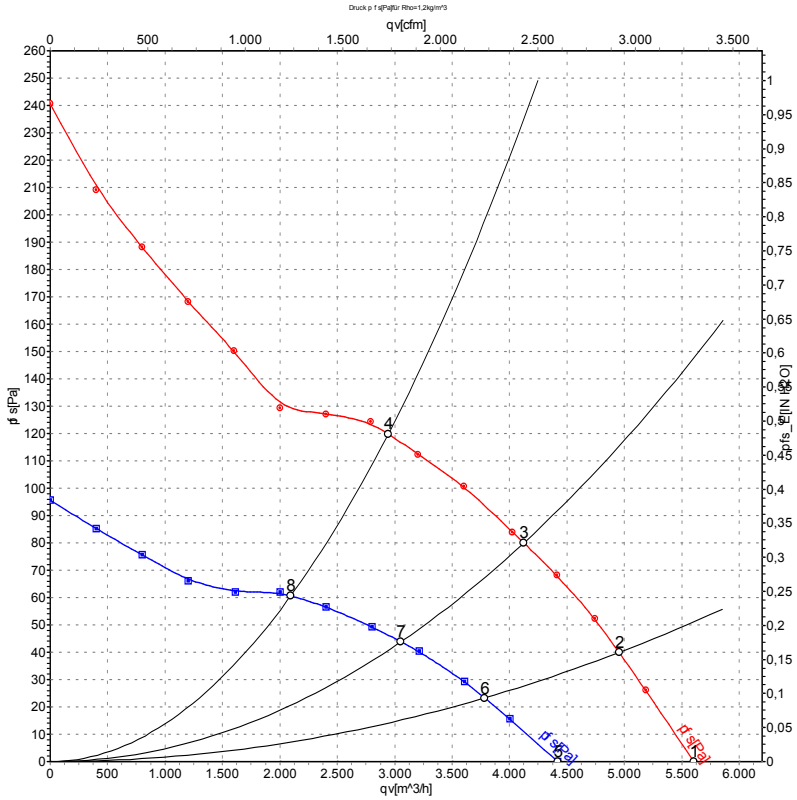

Air performance measured as per ISO 5801 Installation category A. For detailed information on the measuring set-up, please contact ebm-papst. Suction-side noise levels: LwA measured as per ISO 13347 / LpA measured with 1m distance to fan axis. The values given are valid under the measuring conditions mentioned above and may vary according to the actual installation situation. With any deviation from the standard set-up, the specific values have to be checked and reviewed with the unit installed.

Measured values

	Conn.	U	f	n	P_e	I	LwA_{in}	qv	p_{fs}
		V	Hz	min^{-1}	W	A	dB(A)	m^3/h	Pa
1	Δ	400	50	1350	231	0.49	73	5605	0
2	Δ	400	50	1320	262	0.52	74	4955	40
3	Δ	400	50	1300	289	0.55	72	4125	80
4	Δ	400	50	1250	340	0.61	72	2945	120
5	Y	400	50	1070	160	0.27	67	4420	0
6	Y	400	50	1015	172	0.29	66	3785	23
7	Y	400	50	970	182	0.31	65	3055	44
8	Y	400	50	875	200	0.33	65	2095	61

Conn. = Connection · U = Supply voltage · f = Frequency · n = Speed · P_e = Power input · I = Current draw · LwA_{in} = Sound power level inlet side · qv = Air flow · p_{fs} = Pressure increase

ebm-papst Mulfingen GmbH & Co. KG · Bachmühle 2 · D-74673 Mulfingen · Phone +49 (0) 7938 81-0 · Fax +49 (0) 7938 81-110 · info1@de.ebmpapst.com · www.ebmpapst.com

W4D450-CU01-02

AC axial fan

sickled blades (S series)

with full round nozzle

Charts: Air flow 60 Hz Δ

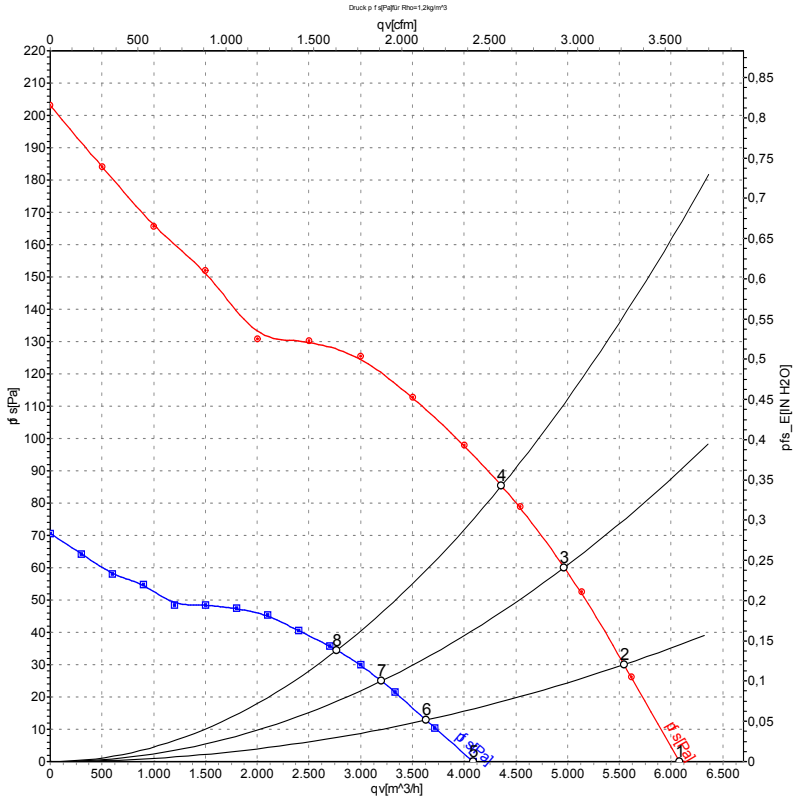

Air performance measured as per ISO 5801 Installation category A. For detailed information on the measuring set-up, please contact ebm-papst. Suction-side noise levels: LwA measured as per ISO 13347 / LpA measured with 1m distance to fan axis. The values given are valid under the measuring conditions mentioned above and may vary according to the actual installation situation. With any deviation from the standard set-up, the specific values have to be checked and reviewed with the unit installed.

Measured values

	Conn.	U	f	n	P_e	I	LwA_{in}	qv	p_{fs}
		V	Hz	min^{-1}	W	A	dB(A)	m^3/h	Pa
1	Δ	400	60	1455	334	0.57	75	6085	0
2	Δ	400	60	1415	359	0.61	75	5545	30
3	Δ	400	60	1380	381	0.64	75	4965	60
4	Δ	400	60	1360	415	0.70	73	4360	85
5	Y	400	60	990	187	0.31	67	4090	0
6	Y	400	60	940	192	0.32	67	3630	13
7	Y	400	60	900	197	0.33	65	3200	25
8	Y	400	60	860	205	0.35	63	2770	35

Conn. = Connection · U = Supply voltage · f = Frequency · n = Speed · P_e = Power input · I = Current draw · LwA_{in} = Sound power level inlet side · qv = Air flow · p_{fs} = Pressure increase

ebm-papst Mulfingen GmbH & Co. KG · Bachmühle 2 · D-74673 Mulfingen · Phone +49 (0) 7938 81-0 · Fax +49 (0) 7938 81-110 · info1@de.ebmpapst.com · www.ebmpapst.com