W4D450-IG01-01

AC axial fan

sickled blades (S series)

In-line duct fan

ebm-papst Mulfingen GmbH & Co. KG
Bachmühle 2 · D-74673 Mulfingen
Phone +49 7938 81-0
Fax +49 7938 81-110
info1@de.ebmpapst.com
www.ebmpapst.com

Limited partnership · Headquarters Mulfingen
County court Stuttgart · HRA 590344

General partner Elektrobau Mulfingen GmbH · Headquarters Mulfingen
County court Stuttgart · HRB 590142

ErP2015 EXCEEDS THE NORM

Nominal data

Type	**W4D450-IG01-01**
Motor	**M4D110-EF**

Phase		3~	3~	3~	3~	3~	3~
Nominal voltage	VAC	400	400	400	400	480	480
Connection		Δ	Y	Δ	Y	Δ	Y
Frequency	Hz	50	50	60	60	60	60
Type of data definition		ml	ml	ml	ml	ml	ml
Valid for approval / standard		CE	CE	CE	CE	CE	CE
Speed	min^{-1}	1350	1075	1495	1045	1575	1195
Power input	W	490	340	700	400	800	520
Current draw	A	1.0	0.58	1.2	0.69	1.2	0.75
Max. back pressure	Pa	115	75	105	50	155	90
Max. ambient temperature	°C	95	95	60	60	60	60
Starting current	A	3.8	1.2	3.45	1.1	4.2	1.3

ml = Max. load · me = Max. efficiency · fa = Running at free air · cs = Customer specs · cu = Customer unit
Subject to alterations

Data according to ErP directive

Installation category	A
Efficiency category	Static
Variable speed drive	No
Specific ratio*	1.00

* Specific ratio = 1 + p_{fs} / 100 000 Pa

		Actual	Request 2013	Request 2015
Overall efficiency η_{es}	%	31.8	27.7	31.7
Efficiency grade N		40.1	36	40
Power input P_e	kW	0.49		
Air flow q_v	m^3/h	4805		
Pressure increase p_{fs}	Pa	117		
Speed n	min^{-1}	1350		

Data definition with optimum efficiency. LU-74752
The ErP data is determined using a motor-impeller combination in a standardised measurement configuration.

ebmpapst

AC axial fan

sickled blades (S series)

In-line duct fan

Technical features

Mass	12.8 kg
Size	450 mm
Surface of rotor	Coated in black
Material of terminal box	ABS plastic
Material of blades	Aluminium sheet, coated in black
Material of mounting ring	Steel, coated in black plastic (RAL 9005)
Material of wall ring	Sheet steel, pre-galvanised and coated in black plastic (RAL 9005)
Number of blades	5
Blade angle	0°
Direction of air flow	"V"
Direction of rotation	Counter-clockwise, seen on rotor
Type of protection	IP 54
Insulation class	"F"
Humidity class	F3-1
Max. permissible ambient motor temp. (transp./ storage)	+ 80 °C
Min. permissible ambient motor temp. (transp./storage)	- 40 °C
Mounting position	Shaft horizontal or rotor on bottom; rotor on top on request
Condensate discharge holes	Rotor-side
Operation mode	S1
Motor bearing	Ball bearing
Touch current acc. IEC 60990 (measuring network Fig. 4, TN system)	<= 3.5 mA
Electrical leads	Via terminal box
Motor protection	Thermal overload protector (TOP) brought out
Cable exit	Variable
Protection class	I (if protective earth is connected by customer)
Product conforming to standard	EN 61800-5-1; CE
Approval	EAC

ebm-papst Mulfingen GmbH & Co. KG · Bachmühle 2 · D-74673 Mulfingen · Phone +49 (0) 7938 81-0 · Fax +49 (0) 7938 81-110 · info1@de.ebmpapst.com · www.ebmpapst.com

AC axial fan

sickled blades (S series)

In-line duct fan

Product drawing

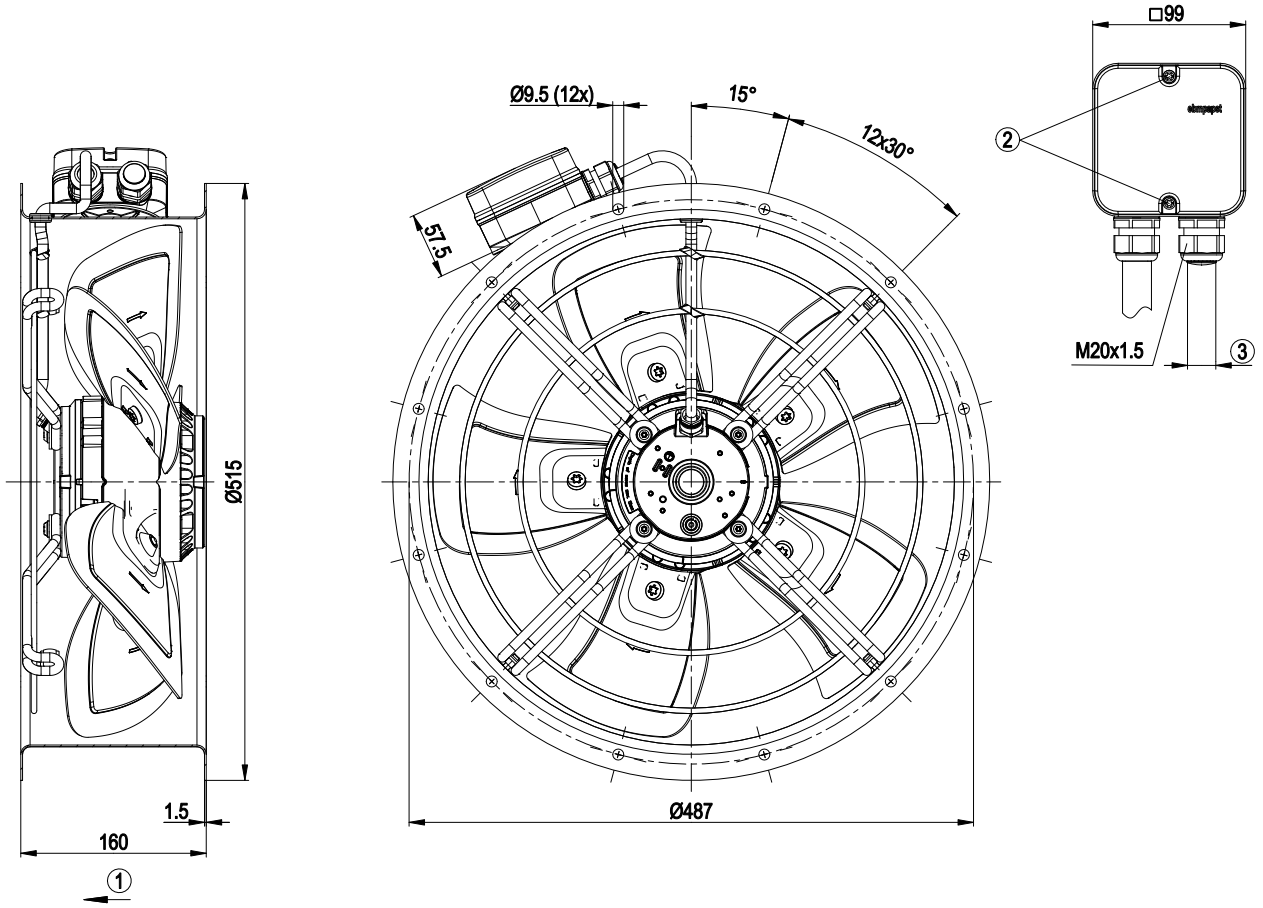

1	Direction of airflow "V"
2	Tightening torque 1.5±0.2 Nm
3	Cable diameter min. 6 mm, max. 12 mm, tightening torque 2.5±0.4 Nm

ebm-papst Mulfingen GmbH & Co. KG · Bachmühle 2 · D-74673 Mulfingen · Phone +49 (0) 7938 81-0 · Fax +49 (0) 7938 81-110 · info1@de.ebmpapst.com · www.ebmpapst.com

AC axial fan

sickled blades (S series)

In-line duct fan

Connection screen

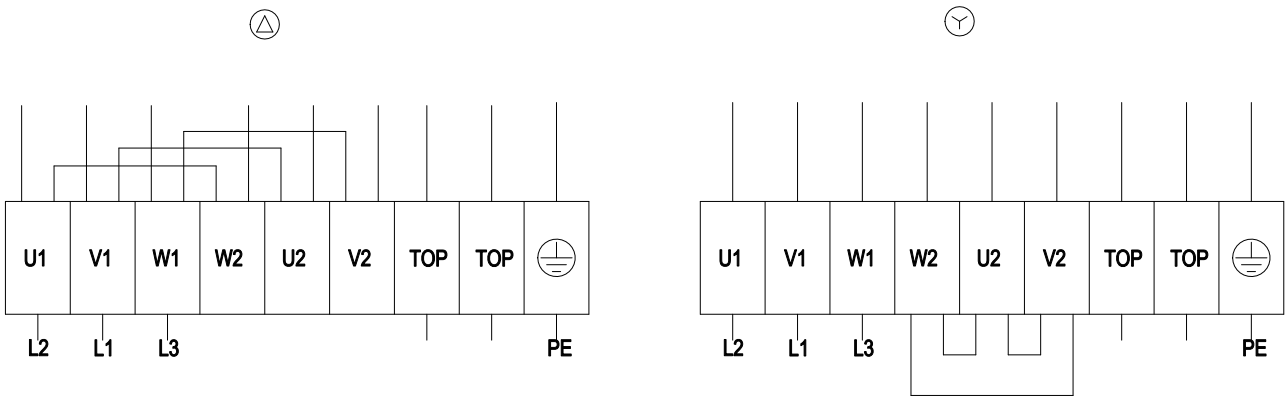

Δ	Delta connection	Y	Star connection	L1	= V1 = blue
L2	= U1 = black	L3	= W1 = brown	W2	yellow
U2	green	V2	white	TOP	2 x grey
PE	green/yellow				

ebm-papst Mulfingen GmbH & Co. KG · Bachmühle 2 · D-74673 Mulfingen · Phone +49 (0) 7938 81-0 · Fax +49 (0) 7938 81-110 · info1@de.ebmpapst.com · www.ebmpapst.com

AC axial fan

sickled blades (S series)

In-line duct fan

Charts: Air flow 50 Hz Δ

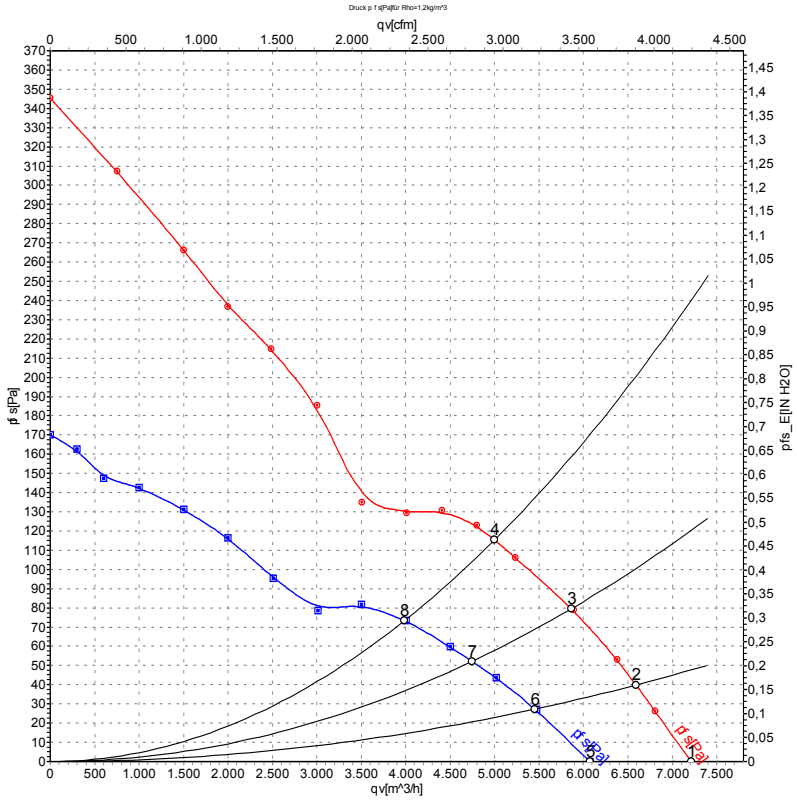

Air performance measured as per ISO 5801 Installation category A. For detailed information on the measuring set-up, please contact ebm-papst. Suction-side noise levels: LwA measured as per ISO 13347 / LpA measured with 1m distance to fan axis. The values given are valid under the measuring conditions mentioned above and may vary according to the actual installation situation. With any deviation from the standard set-up, the specific values have to be checked and reviewed with the unit installed.

Measured values

	Conn.	U	f	n	P_e	I	qv	p_{fs}
		V	Hz	min^{-1}	W	A	m^3/h	Pa
1	Δ	400	50	1380	410	0.90	7210	0
2	Δ	400	50	1370	442	0.94	6590	40
3	Δ	400	50	1360	469	0.97	5860	80
4	Δ	400	50	1350	490	1.00	5000	115
5	Y	400	50	1150	295	0.50	6070	0
6	Y	400	50	1125	316	0.53	5450	28
7	Y	400	50	1100	330	0.55	4745	52
8	Y	400	50	1075	340	0.58	3985	75

Conn. = Connection · U = Supply voltage · f = Frequency · n = Speed · P_e = Power input · I = Current draw · qv = Air flow · p_{fs} = Pressure increase

ebm-papst Mulfingen GmbH & Co. KG · Bachmühle 2 · D-74673 Mulfingen · Phone +49 (0) 7938 81-0 · Fax +49 (0) 7938 81-110 · info1@de.ebmpapst.com · www.ebmpapst.com

AC axial fan

sickled blades (S series)

In-line duct fan

Charts: Air flow 60 Hz Δ

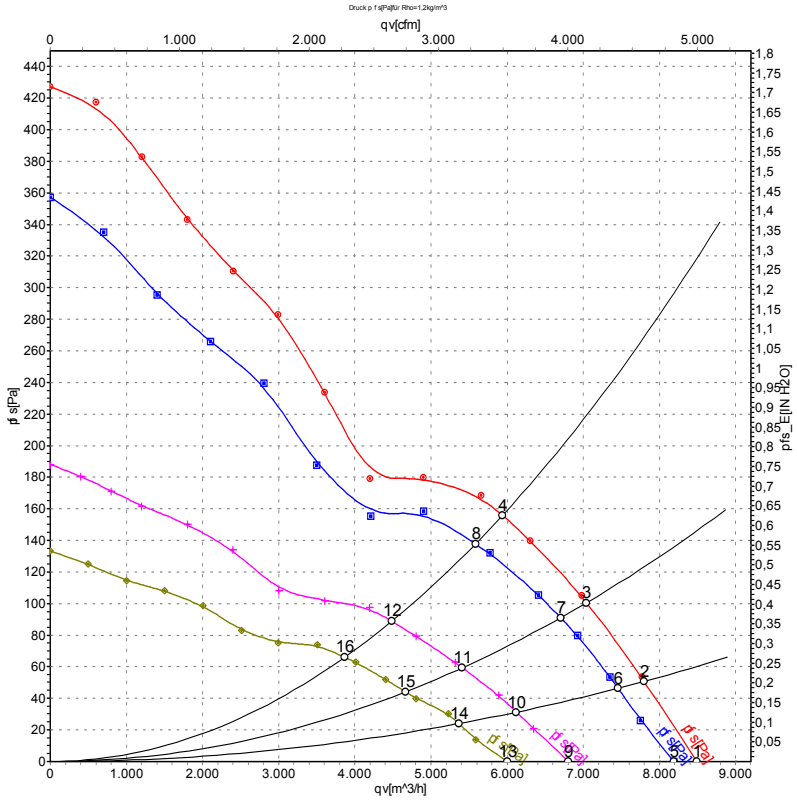

Air performance measured as per ISO 5801 Installation category A. For detailed information on the measuring set-up, please contact ebm-papst. Suction-side noise levels: LwA measured as per ISO 13347 / LpA measured with 1m distance to fan axis. The values given are valid under the measuring conditions mentioned above and may vary according to the actual installation situation. With any deviation from the standard set-up, the specific values have to be checked and reviewed with the unit installed.

Measured values

	Conn.	U	f	n	P_e	I	qv	p_{fs}
		V	Hz	min^{-1}	W	A	m^3/h	Pa
1	Δ	480	60	1620	640	1.03	8490	0
2	Δ	480	60	1605	711	1.11	7795	50
3	Δ	480	60	1590	754	1.15	7040	100
4	Δ	480	60	1575	800	1.20	5940	155
5	Δ	400	60	1550	605	1.06	8185	0
6	Δ	400	60	1525	647	1.11	7455	46
7	Δ	400	60	1505	687	1.17	6700	91
8	Δ	400	60	1495	700	1.20	5585	138
9	Y	480	60	1305	460	0.64	6805	0
10	Y	480	60	1260	485	0.68	6120	31
11	Y	480	60	1230	502	0.70	5410	59
12	Y	480	60	1195	520	0.75	4485	90
13	Y	400	60	1145	375	0.64	6000	0
14	Y	400	60	1095	388	0.67	5365	24
15	Y	400	60	1060	395	0.68	4665	44
16	Y	400	60	1045	400	0.69	3865	66

Conn. = Connection · U = Supply voltage · f = Frequency · n = Speed · P_e = Power input · I = Current draw · qv = Air flow · p_{fs} = Pressure increase

ebm-papst Mulfingen GmbH & Co. KG · Bachmühle 2 · D-74673 Mulfingen · Phone +49 (0) 7938 81-0 · Fax +49 (0) 7938 81-110 · info1@de.ebmpapst.com · www.ebmpapst.com