W4D500-CD03-80

AC axial fan

sickled blades (S series)

with full round nozzle, Transformator fan

ebm-papst Mulfingen GmbH & Co. KG
Bachmühle 2 · D-74673 Mulfingen
Phone +49 7938 81-0
Fax +49 7938 81-110
info1@de.ebmpapst.com
www.ebmpapst.com

Limited partnership · Headquarters Mulfingen
County court Stuttgart · HRA 590344

General partner Elektrobau Mulfingen GmbH · Headquarters Mulfingen
County court Stuttgart · HRB 590142

ErP2013 EXCEEDS THE NORM

Nominal data

Type	**W4D500-CD03-80**
Motor	**M4D110-GF**

Phase		3~	3~	3~	3~
Nominal voltage	VAC	400	400	480	480
Connection		Δ	Y	Δ	Y
Frequency	Hz	50	50	60	60
Type of data definition		fa	fa	fa	fa
Valid for approval / standard		CE	CE	CE	CE
Speed	min^{-1}	1380	1160	1620	1280
Power input	W	620	455	1000	695
Current draw	A	1.3	0.77	1.55	0.98
Max. back pressure	Pa	160	100	150	84
Max. ambient temperature	°C	80	80	50	50
Starting current	A	6.5	2	7.5	2.2

ml = max. load · me = max. efficiency · fa = running at free air · cs = customer specs · cu = customer unit
Subject to alterations

Data according to ErP directive

Installation category	A
Efficiency category	Static
Variable speed drive	No
Specific ratio*	1.00

* Specific ratio = 1 + p_{fs} / 100 000 Pa

		Actual	Request 2013	Request 2015
Overall efficiency η_{es}		31.3	29	33
Efficiency grade N		38.3	36	40
Power input P_e	kW	0.77		
Air flow q_v	m^3/h	6045		
Pressure increase p_{fs}	Pa	144		
Speed n	min^{-1}	1335		

Data established at point of optimum efficiency

AC axial fan

sickled blades (S series)

with full round nozzle, Transformator fan

Technical features

Mass	18.7 kg
Size	500 mm
Surface of rotor	Coated in black
Material of terminal box	Die-cast aluminium, coated in black
Material of blades	Aluminium sheet, coated in black
Material of wall ring	Sheet steel, pre-galvanised and plastic-coated in white aluminium (RAL 9006)
Material of guard grille	Steel, galvanised and plastic-coated in white aluminium (RAL 9006)
Number of blades	5
Blade angle	0°
Direction of air flow	"A"
Direction of rotation	Clockwise, seen on rotor
Type of protection	IP 54
Insulation class	"F"
Humidity class	F4-2
Max. permissible ambient motor temp. (transp./ storage)	+ 80 °C
Min. permissible ambient motor temp. (transp./storage)	- 40 °C
Mounting position	Shaft horizontal or rotor on top; rotor on bottom on request
Condensate discharge holes	On the stator side
Operation mode	S1
Motor bearing	Ball bearing
Touch current acc. IEC 60990 (measuring network Fig. 4, TN system)	<= 3.5 mA
Electrical leads	Via terminal box
Motor protection	Thermal overload protector (TOP) brought out
Cable exit	Axial
Protection class	I (if protective earth is connected by customer)
Product conforming to standard	EN 61800-5-1; CE
Approval	VDE

ebm-papst Mulfingen GmbH & Co. KG · Bachmühle 2 · D-74673 Mulfingen · Phone +49 (0) 7938 81-0 · Fax +49 (0) 7938 81-110 · info1@de.ebmpapst.com · www.ebmpapst.com

AC axial fan

sickled blades (S series)

with full round nozzle, Transformator fan

Product drawing

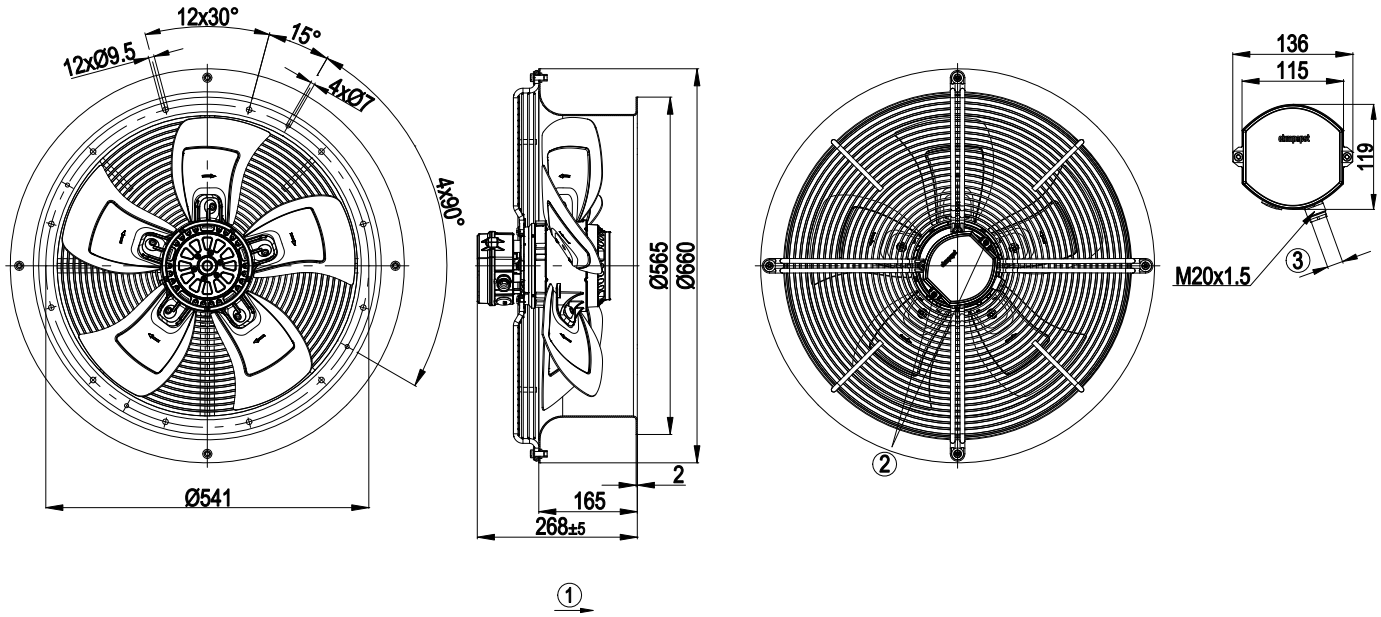

1	Direction of air flow "A"
2	Tightening torque 2.5±0.4 Nm
3	Cable diameter: max. 12 mm; tightening torque 4±0.4 Nm

ebm-papst Mulfingen GmbH & Co. KG · Bachmühle 2 · D-74673 Mulfingen · Phone +49 (0) 7938 81-0 · Fax +49 (0) 7938 81-110 · info1@de.ebmpapst.com · www.ebmpapst.com

AC axial fan

sickled blades (S series)

with full round nozzle, Transformator fan

Connection screen

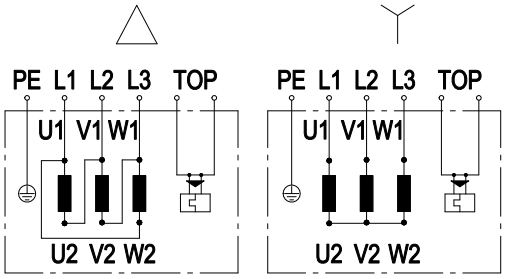

Δ	Delta connection	Y	Star connection	L1	black
L2	blue	L3	brown	U1	black
V1	blue	W1	brown	U2	green
V2	white	W2	yellow	TOP	2xgrey
PE	green/yellow				

ebm-papst Mulfingen GmbH & Co. KG · Bachmühle 2 · D-74673 Mulfingen · Phone +49 (0) 7938 81-0 · Fax +49 (0) 7938 81-110 · info1@de.ebmpapst.com · www.ebmpapst.com

AC axial fan

sickled blades (S series)

with full round nozzle, Transformator fan

Charts: Air flow 50 Hz Δ

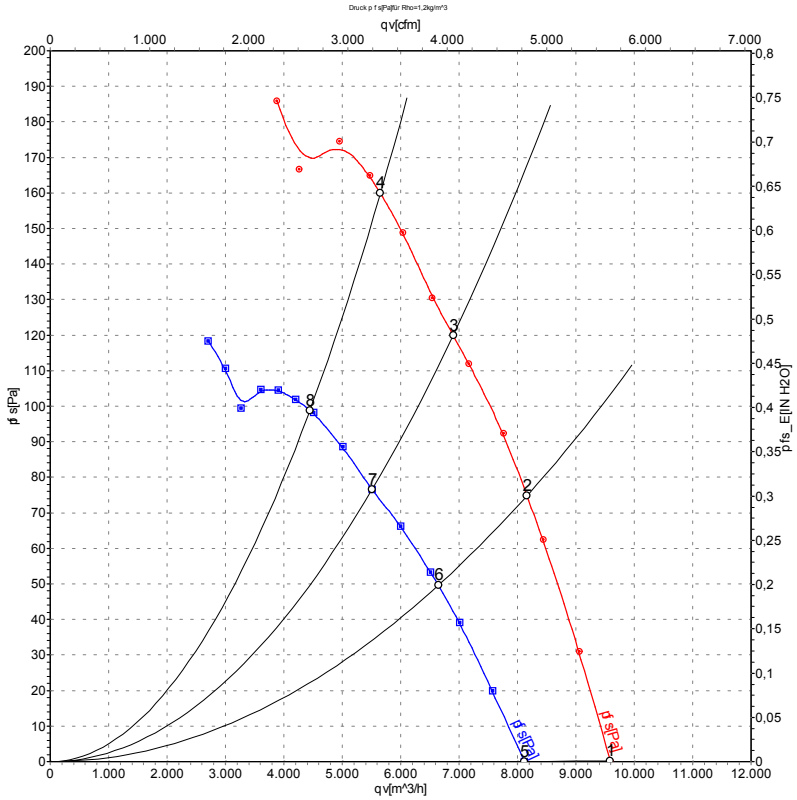

Measurement: LU-100710
Measurement: LU-100714

Air performance measured as per ISO 5801 Installation category A. For detailed information on the measuring set-up, please contact ebm-papst. Suction-side noise levels: LwA measured as per ISO 13347 / LpA measured with 1m distance to fan axis. The values given are valid under the measuring conditions mentioned above and may vary according to the actual installation situation. With any deviation from the standard set-up, the specific values have to be checked and reviewed with the unit installed.

Measured values

	Conn.	U	f	n	P_e	I	LpA_{in}	LwA_{in}	qv	p_{fs}
		V	Hz	min^{-1}	W	A	dB(A)	dB(A)	m^3/h	Pa
1	Δ	400	50	1380	620	1.30	71	77	9590	0
2	Δ	400	50	1360	700	1.38	71	77	8160	75
3	Δ	400	50	1345	749	1.44	71	78	6900	120
4	Δ	400	50	1325	820	1.59	73	80	5655	160
5	Y	400	50	1160	455	0.77	73	80	8120	0
6	Y	400	50	1105	498	0.84	73	80	6645	50
7	Y	400	50	1075	519	0.87	73	80	5515	76
8	Y	400	50	1035	550	0.95	73	80	4445	100

Conn. = Connection · U = Supply voltage · f = Frequency · n = Speed · P_e = Power input · I = Current draw · LpA_{in} = Sound pressure level inlet side · LwA_{in} = Sound power level inlet side
qv = Air flow · p_{fs} = Pressure increase

ebm-papst Mulfingen GmbH & Co. KG · Bachmühle 2 · D-74673 Mulfingen · Phone +49 (0) 7938 81-0 · Fax +49 (0) 7938 81-110 · info1@de.ebmpapst.com · www.ebmpapst.com

AC axial fan

sickled blades (S series)

with full round nozzle, Transformator fan

Charts: Air flow 60 Hz Δ

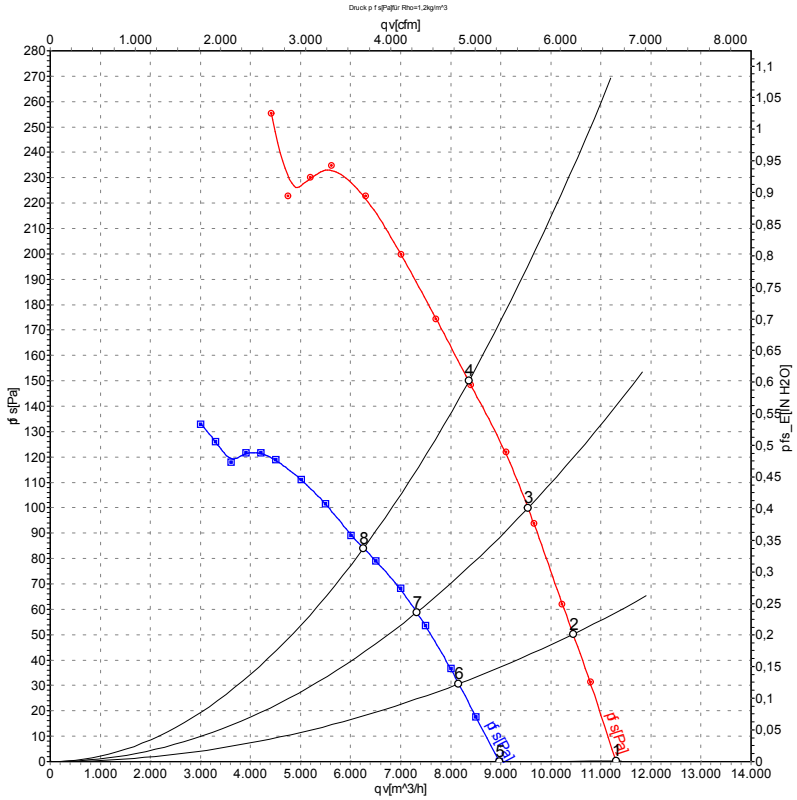

Measurement: LU-100711
Measurement: LU-100715

Air performance measured as per ISO 5801 Installation category A. For detailed information on the measuring set-up, please contact ebm-papst. Suction-side noise levels: LwA measured as per ISO 13347 / LpA measured with 1m distance to fan axis. The values given are valid under the measuring conditions mentioned above and may vary according to the actual installation situation. With any deviation from the standard set-up, the specific values have to be checked and reviewed with the unit installed.

Measured values

	Conn.	U	f	n	P_e	I	LpA_{in}	LwA_{in}	qv	p_{fs}
		V	Hz	min^{-1}	W	A	dB(A)	dB(A)	m^3/h	Pa
1	Δ	480	60	1620	1000	1.55	74	80	11300	0
2	Δ	480	60	1605	1069	1.63	74	80	10440	50
3	Δ	480	60	1590	1138	1.70	74	80	9545	100
4	Δ	480	60	1570	1220	1.86	75	81	8360	150
5	Y	480	60	1280	695	0.98	75	81	8970	0
6	Y	480	60	1250	723	1.02	75	81	8160	31
7	Y	480	60	1210	748	1.06	75	81	7320	59
8	Y	480	60	1170	770	1.13	75	81	6260	84

Conn. = Connection · U = Supply voltage · f = Frequency · n = Speed · P_e = Power input · I = Current draw · LpA_{in} = Sound pressure level inlet side · LwA_{in} = Sound power level inlet side
qv = Air flow · p_{fs} = Pressure increase

ebm-papst Mulfingen GmbH & Co. KG · Bachmühle 2 · D-74673 Mulfingen · Phone +49 (0) 7938 81-0 · Fax +49 (0) 7938 81-110 · info1@de.ebmpapst.com · www.ebmpapst.com