W4D560-CF03-05

AC axial fan

sickled blades (S series)

In-line duct fan

ebm-papst Mulfingen GmbH & Co. KG
Bachmühle 2 · D-74673 Mulfingen
Phone +49 7938 81-0
Fax +49 7938 81-110
info1@de.ebmpapst.com
www.ebmpapst.com

Limited partnership · Headquarters Mulfingen
County court Stuttgart · HRA 590344

General partner: Elektrobau Mulfingen GmbH · Headquarters Mulfingen
County court Stuttgart · HRB 590142

ErP2015 EXCEEDS THE NORM

Nominal data

Type	**W4D560-CF03-05**
Motor	**M4D110-GF**

Phase		3~	3~
Nominal voltage	VAC	400	400
Connection		**Δ**	Y
Frequency	Hz	50	50
Type of data definition		ml	ml
Valid for approval / standard		CE	CE
Speed	min^{-1}	1305	995
Power input	W	930	600
Current draw	A	1.78	1.05
Max. back pressure	Pa	195	110
Max. ambient temperature	°C	65	65

ml = max. load · me = max. efficiency · fa = running at free air · cs = customer specs · cu = customer unit
Subject to alterations

Data according to ErP directive

Installation category	A
Efficiency category	Static
Variable speed drive integrated	No
Specific ratio*	1,00

* Specific ratio = 1 + p_{fs} / 100 000 Pa

		Actual	Request 2013	Request 2015
Overall efficiency η_{es}		35,3	29,4	33,4
Efficiency grade N		41,9	36	40
Power input P_e	kW	0,89		
Air flow q_v	m^3/h	6315		
Pressure increase p_{fs}	Pa	180		
Speed n	min^{-1}	1315		

Data established at point of optimum efficiency

AC axial fan

sickled blades (S series)

In-line duct fan

Technical features

Mass	20 kg
Size	560 mm
Surface of rotor	Coated in black
Material of terminal box	Die-cast aluminium
Material of blades	Aluminium sheet, coated in black
Material of mounting ring	Steel, phosphated and coated in black plastic
Material of wall ring	Sheet steel, pre-galvanised and coated in black plastic
Number of blades	5
Blade angle	10°
Direction of air flow	"V"
Direction of rotation	Counter-clockwise, seen on rotor
Type of protection	IP 54
Insulation class	"F"
Humidity class	F4-1
Max. permissible ambient motor temp. (transp./ storage)	+80 °C
Min. permissible ambient motor temp. (transp./storage)	-40 °C
Mounting position	Shaft horizontal or rotor on bottom; rotor on top on request
Condensate discharge holes	Rotor-side
Operation mode	S1
Motor bearing	Ball bearing
Leakage current	<= 3.5 mA
Electrical leads	Via terminal box
Motor protection	Thermal overload protector (TOP) brought out
Cable exit	Axial
Protection class	I (if protective earth is connected by customer)
Product conforming to standard	EN 61800-5-1; CE
Approval	VDE

ebm-papst Mulfingen GmbH & Co. KG · Bachmühle 2 · D-74673 Mulfingen · Phone +49 7938 81-0 · Fax +49 7938 81-110 · info1@de.ebmpapst.com · www.ebmpapst.com

AC axial fan

sickled blades (S series)

In-line duct fan

Product drawing

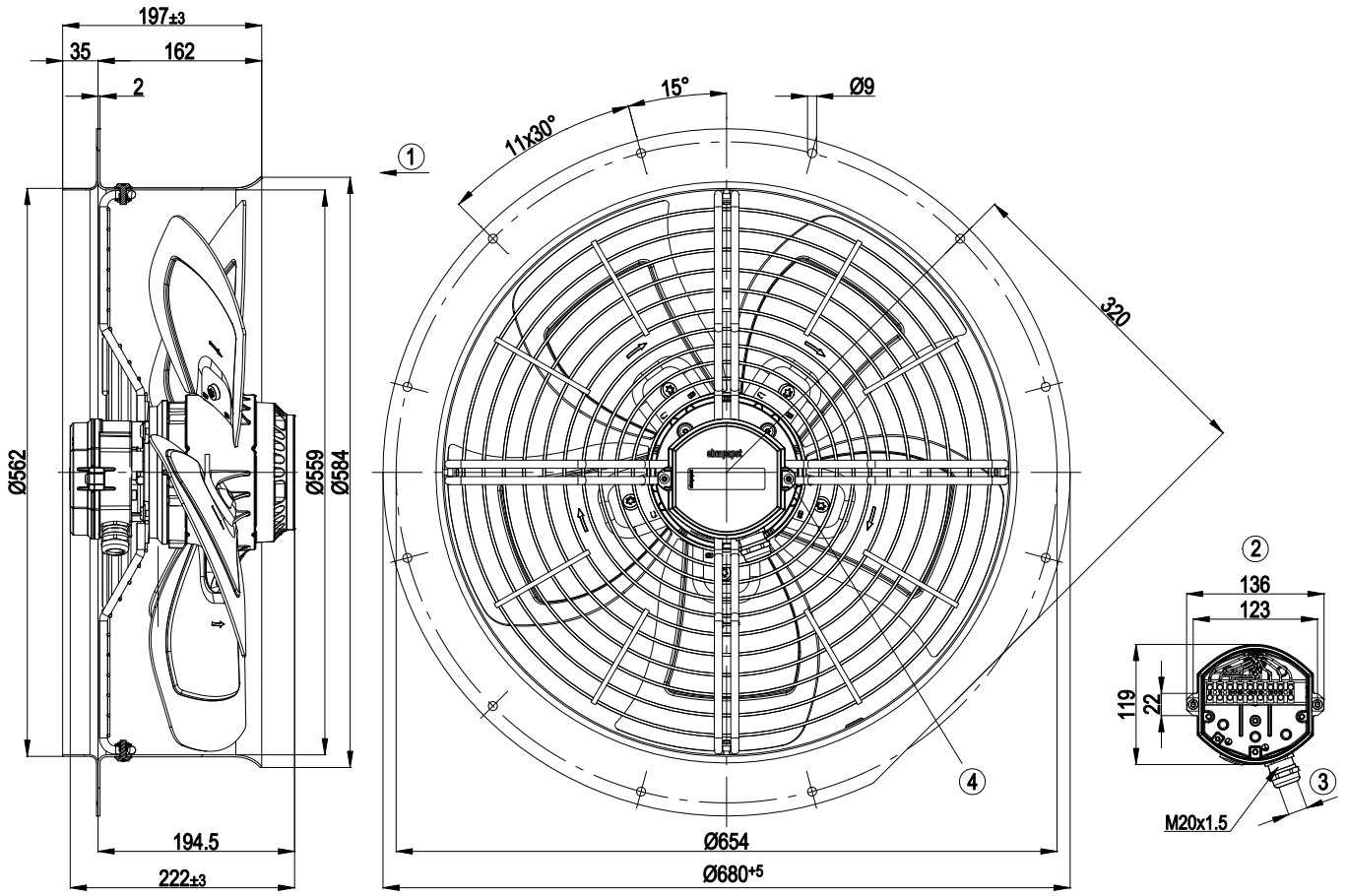

1	Direction of air flow "V"
2	Illustration without terminal box cover
3	Cable diameter: min. 11 mm, max. 16 mm; tightening torque: 4.0 ± 0.4 Nm
4	Tightening torque 2±0.2 Nm

ebm-papst Mulfingen GmbH & Co. KG · Bachmühle 2 · D-74673 Mulfingen · Phone +49 7938 81-0 · Fax +49 7938 81-110 · info1@de.ebmpapst.com · www.ebmpapst.com

AC axial fan

sickled blades (S series)

In-line duct fan

Connection screen

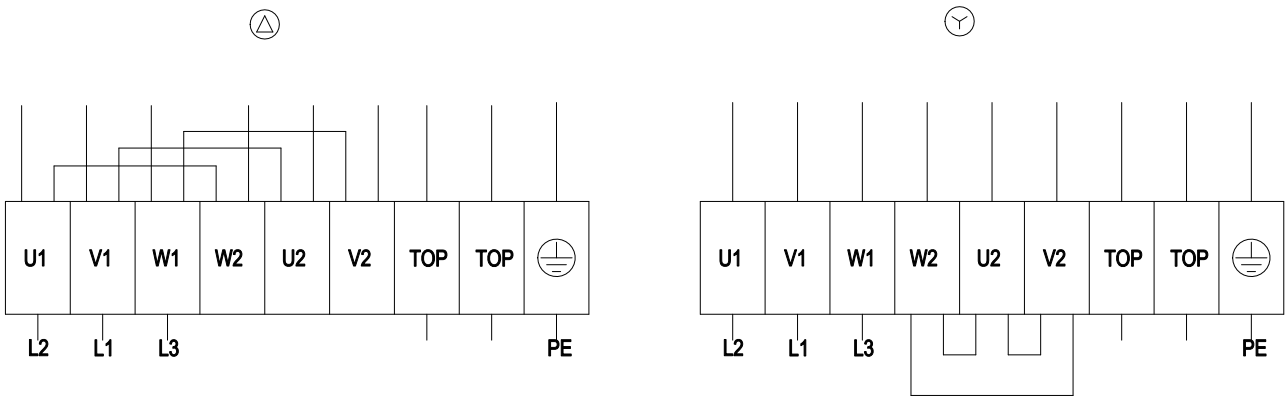

Δ	Delta connection	Y	Star connection	L1	= V1 = blue
L2	= U1 = black	L3	= W1 = brown	W2	yellow
U2	green	V2	white	TOP	2 x grey
PE	green/yellow				

ebm-papst Mulfingen GmbH & Co. KG · Bachmühle 2 · D-74673 Mulfingen · Phone +49 7938 81-0 · Fax +49 7938 81-110 · info1@de.ebmpapst.com · www.ebmpapst.com

AC axial fan

sickled blades (S series)

In-line duct fan

Charts: Air flow 50 Hz Δ

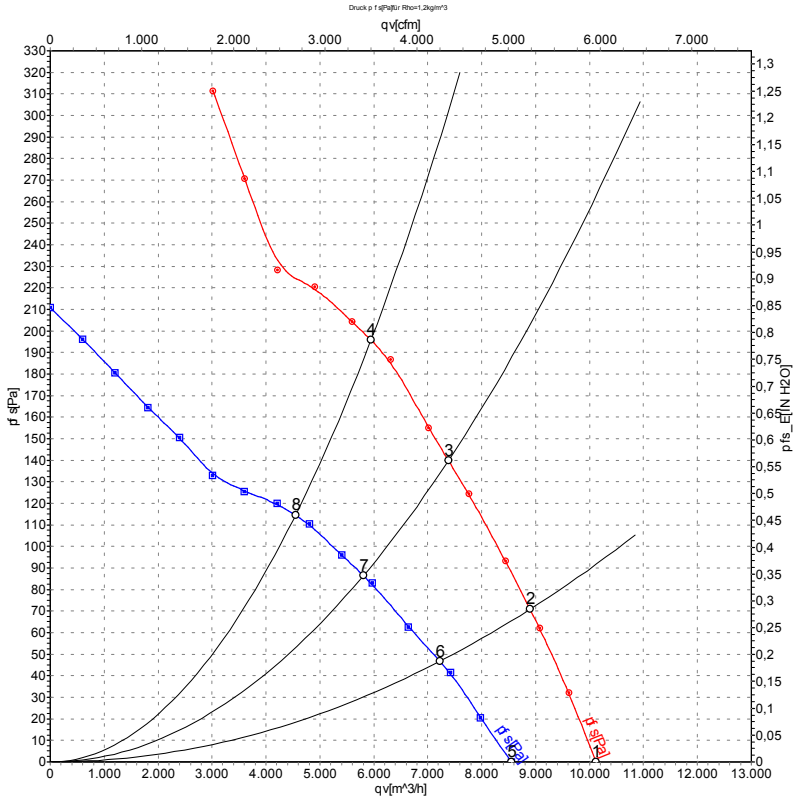

Measurement: LU-72507
Measurement: LU-72508

Air performance measured as per ISO 5801 Installation category A. For detailed information on the measuring set-up, please contact ebm-papst. Suction-side noise levels: LwA measured as per ISO 13347 / LpA measured with 1m distance to fan axis. The values given are valid under the measuring conditions mentioned above and may vary according to the actual installation situation. With any deviation from the standard set-up, the specific values have to be checked and reviewed with the unit installed.

Measured values

	Conn.	U	f	n	P_e	I	qv	p_{fs}
		V	Hz	min^{-1}	W	A	m^3/h	Pa
1	Δ	400	50	1380	640	1.39	10120	0
2	Δ	400	50	1350	747	1.49	8895	71
3	Δ	400	50	1330	833	1.59	7385	140
4	Δ	400	50	1305	930	1.78	5945	195
5	Y	400	50	1160	470	0.79	8545	0
6	Y	400	50	1095	527	0.88	7225	47
7	Y	400	50	1045	561	0.94	5810	87
8	Y	400	50	995	600	1.05	4545	115

ebm-papst Mulfingen GmbH & Co. KG · Bachmühle 2 · D-74673 Mulfingen · Phone +49 7938 81-0 · Fax +49 7938 81-110 · info1@de.ebmpapst.com · www.ebmpapst.com