W4D560-DF03-02

AC axial fan with full square nozzle

sickled blades (S series)

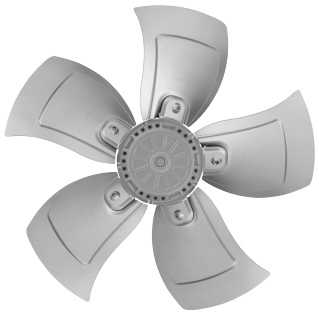

ebm-papst Mulfingen GmbH & Co. KG
Bachmühle 2
74673 Mulfingen
Phone: +49 7938 81-0
Fax: +49 7938 81-110
www.ebmpapst.com
info1@de.ebmpapst.com

Nominal data

Type	**W4D560-DF03-02**		
Motor	**M4D110-GF**		
Phase		3~	3~
Nominal voltage	[V]	400	400
Connection		**D**	Y
Frequency	[Hz]	50	50
Type of data definition		ml	ml
Valid for approval / standard		CE	CE
Speed	[min^{-1}]	1305	995
Power input	[W]	930	600
Current draw	[A]	1,78	1.05
Max. back pressure	[Pa]	195	110
Max. ambient temperature	[°C]	65	65
Air flow	[m^3/h]	10120	8540
Back pressure	[Pa]	0	0

ml = max. load · me = max. efficiency · rfa = running at free air · cs = customer specs · cu = customer unit
Subject to alterations

AC axial fan with full square nozzle

sickled blades (S series)

Technical features

Size	560 mm
Operation mode	Continuous operation (S1)
Direction of rotation	Clockwise, seen on rotor
Electrical leads	Via terminal box
Direction of air flow	"A"
Insulation class	"F"
Cable exit	Axial
Bearing motor	Ball bearing
Mass	20.3 kg
Material of electronics housing	Rotor: Cast in aluminum
Material of impeller	Aluminum sheet
Motor protection	Thermal overload protector (TOP) brought out
Product conforming to standard	CE
Number of blades	5
Type of protection	IP 54
Protection class	I

ebm-papst Mulfingen GmbH & Co. KG · Bachmühle 2 · 74673 Mulfingen · Phone: +49 7938 81-0 · Fax: +49 7938 81-110 · www.ebmpapst.com · info1@de.ebmpapst.com

AC axial fan with full square nozzle

sickled blades (S series)

Product drawing

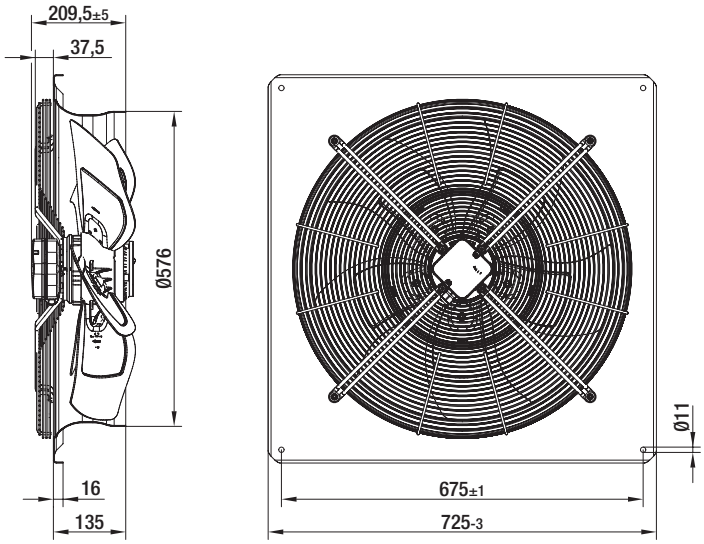

ebm-papst Mulfingen GmbH & Co. KG · Bachmühle 2 · 74673 Mulfingen · Phone: +49 7938 81-0 · Fax: +49 7938 81-110 · www.ebmpapst.com · info1@de.ebmpapst.com

AC axial fan with full square nozzle

sickled blades (S series)

Connection screen

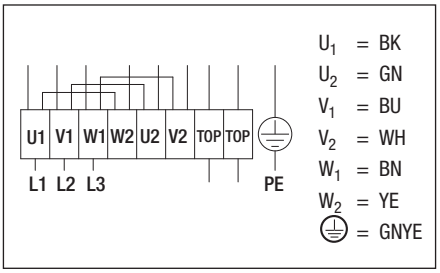

ebm-papst Mulfingen GmbH & Co. KG · Bachmühle 2 · 74673 Mulfingen · Phone: +49 7938 81-0 · Fax: +49 7938 81-110 · www.ebmpapst.com · info1@de.ebmpapst.com

AC axial fan with full square nozzle

sickled blades (S series)

Charts: Air flow

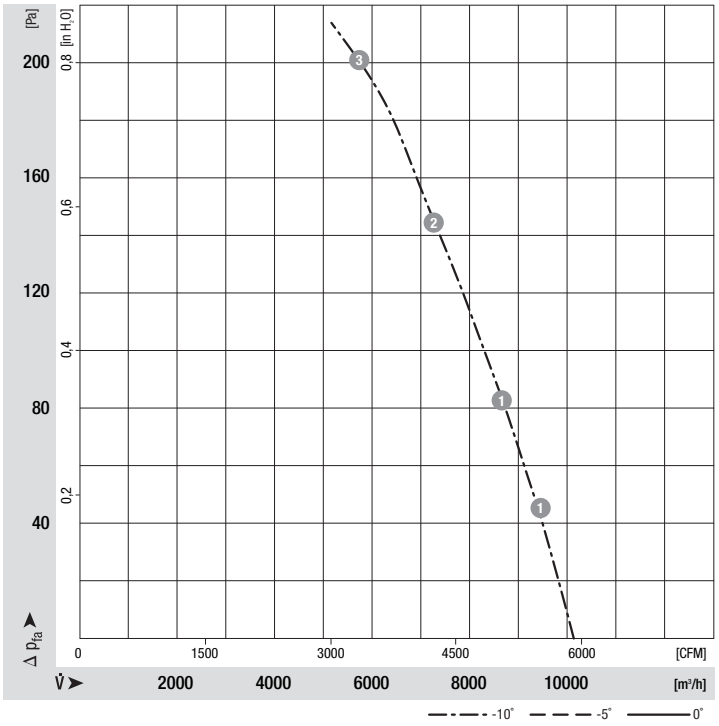

Measured values

	n	P_1	I	LwA_{ss}
	[min-1]	[W]	[A]	[dB(A)]
1	1350	760	1.50	79
2	1330	84	1.60	79
3	1305	930	1.78	80

ebm-papst Mulfingen GmbH & Co. KG · Bachmühle 2 · 74673 Mulfingen · Phone: +49 7938 81-0 · Fax: +49 7938 81-110 · www.ebmpapst.com · info1@de.ebmpapst.com