**W4D630-DH01-02**

# AC axial fan - HyBlade®

sickled blades (S series)

with full square nozzle

**ebm-papst Mulfingen GmbH & Co. KG**
Bachmühle 2 · D-74673 Mulfingen
Phone +49 7938 81-0
Fax +49 7938 81-110
info1@de.ebmpapst.com
www.ebmpapst.com

Limited partnership · Headquarters Mulfingen
County court Stuttgart · HRA 590344

General partner Elektrobau Mulfingen GmbH · Headquarters Mulfingen
County court Stuttgart · HRB 590142

ErP2015 EXCEEDS THE NORM

## Nominal data

| | |
|---|---|
| **Type** | **W4D630-DH01-02** |
| **Motor** | **M4D138-HF** |

| | | | |
|---|---|---|---|
| Phase | | 3~ | 3~ |
| Nominal voltage | VAC | 400 | 400 |
| Connection | | Δ | Y |
| Frequency | Hz | 50 | 50 |
| Type of data definition | | ml | ml |
| Valid for approval / standard | | CE | CE |
| Speed | $min^{-1}$ | 1310 | 1000 |
| Power input | W | 1970 | 1290 |
| Current draw | A | 3.4 | 2.1 |
| Max. back pressure | Pa | 200 | 115 |
| Min. ambient temperature | °C | -40 | -40 |
| Max. ambient temperature | °C | 60 | 60 |
| Starting current | A | 14 | 4.5 |

ml = Max. load · me = Max. efficiency · fa = Running at free air · cs = Customer specs · cu = Customer unit
Subject to alterations

## Data according to ErP directive

| | |
|---|---|
| Installation category | A |
| Efficiency category | Static |
| Variable speed drive | No |
| Specific ratio* | 1.00 |

* Specific ratio = 1 + $p_{fs}$ / 100 000 Pa

| | | Actual | Request 2013 | Request 2015 |
|---|---|---|---|---|
| Overall efficiency $\eta_{es}$ | | 35.4 | 31.4 | 35.4 |
| Efficiency grade N | | 40 | 36 | 40 |
| Power input $P_e$ | kW | 1.89 | | |
| Air flow $q_v$ | $m^3/h$ | 12645 | | |
| Pressure increase $p_{fs}$ | Pa | 188 | | |
| Speed n | $min^{-1}$ | 1335 | | |

Data definition with optimum efficiency.
The ErP data is determined using a motor-impeller combination in a standardised measurement configuration.

# AC axial fan - HyBlade®

sickled blades (S series)

with full square nozzle

## Technical features

| | |
|---|---|
| **Mass** | 35.8 kg |
| **Size** | 630 mm |
| **Surface of rotor** | Cast in aluminium |
| **Material of terminal box** | Plastic, fibreglass-reinforced |
| **Material of blades** | Aluminium sheet insert, sprayed with PP plastic |
| **Material of wall ring** | Sheet steel, pre-galvanized and coated in black plastic |
| **Material of guard grille** | Steel, coated in black plastic (RAL9005) |
| **Number of blades** | 5 |
| **Blade angle** | -5° |
| **Direction of air flow** | "A" |
| **Direction of rotation** | Counter-clockwise, seen on rotor |
| **Type of protection** | IP 54 |
| **Insulation class** | "F" |
| **Humidity class** | F3-1 |
| **Max. permissible ambient motor temp. (transp./ storage)** | + 80 °C |
| **Min. permissible ambient motor temp. (transp./storage)** | - 40 °C |
| **Mounting position** | Any |
| **Condensate discharge holes** | On rotor and stator sides |
| **Operation mode** | S1 |
| **Motor bearing** | Ball bearing |
| **Touch current acc. IEC 60990 (measuring network Fig. 4, TN system)** | <= 3.5 mA |
| **Electrical leads** | Via terminal box |
| **Motor protection** | Thermal overload protector (TOP) brought out |
| **Cable exit** | Axial |
| **Protection class** | I (if protective earth is connected by customer) |
| **Product conforming to standard** | EN 61800-5-1; EN 60034; CE |
| **Approval** | VDE; GOST |



ebm-papst Mulfingen GmbH & Co. KG · Bachmühle 2 · D-74673 Mulfingen · Phone +49 (0) 7938 81-0 · Fax +49 (0) 7938 81-110 · info1@de.ebmpapst.com · www.ebmpapst.com

# AC axial fan - HyBlade®

sickled blades (S series)

with full square nozzle

## Product drawing

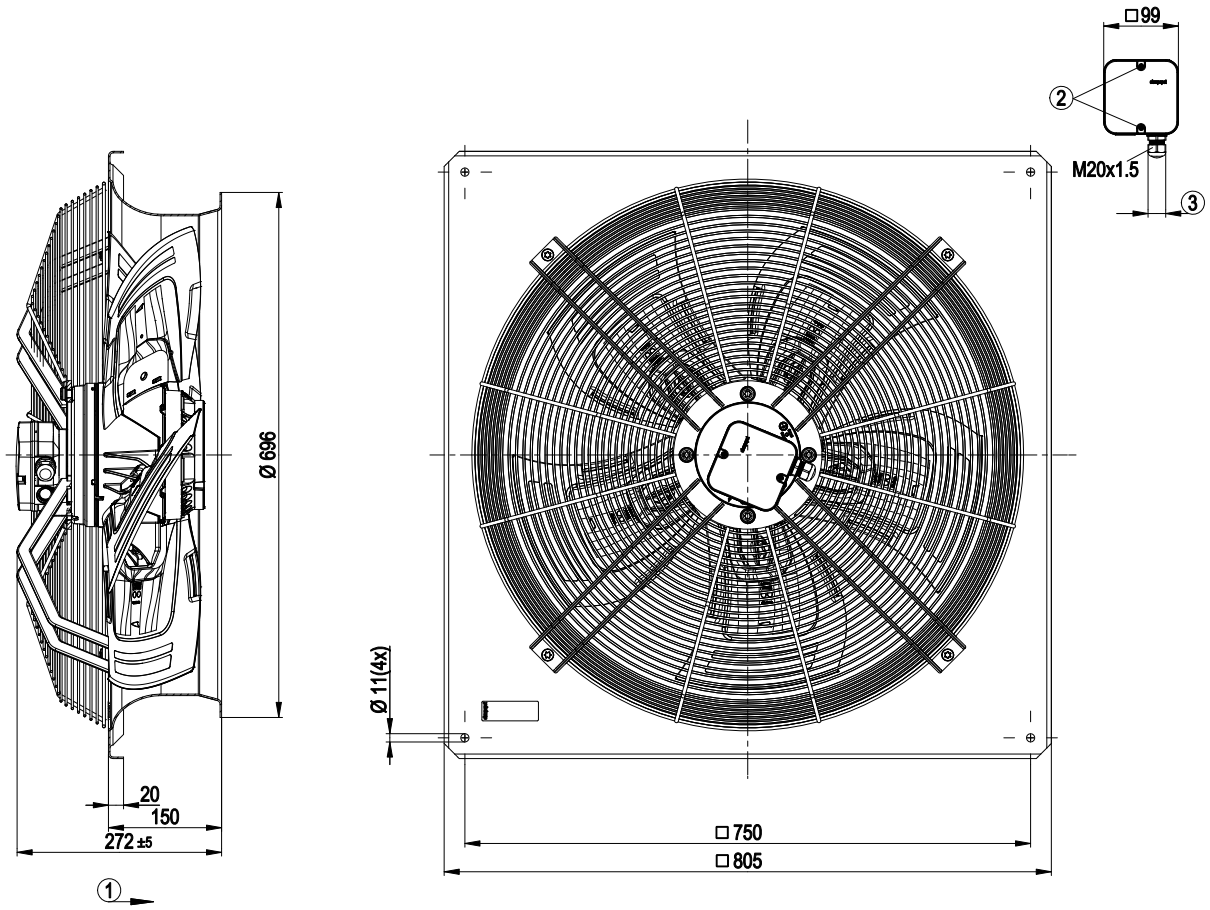


| | |
|---|---|
| 1 | Direction of air flow "A" |
| 2 | Tightening torque 1.5 ± 0.2 Nm |
| 4 | Cable diameter: min. 7 mm, max. 14 mm, tightening torque: 2 ± 0.3 Nm |



ebm-papst Mulfingen GmbH & Co. KG · Bachmühle 2 · D-74673 Mulfingen · Phone +49 (0) 7938 81-0 · Fax +49 (0) 7938 81-110 · info1@de.ebmpapst.com · www.ebmpapst.com

# AC axial fan - HyBlade®

sickled blades (S series)

with full square nozzle

## Connection screen

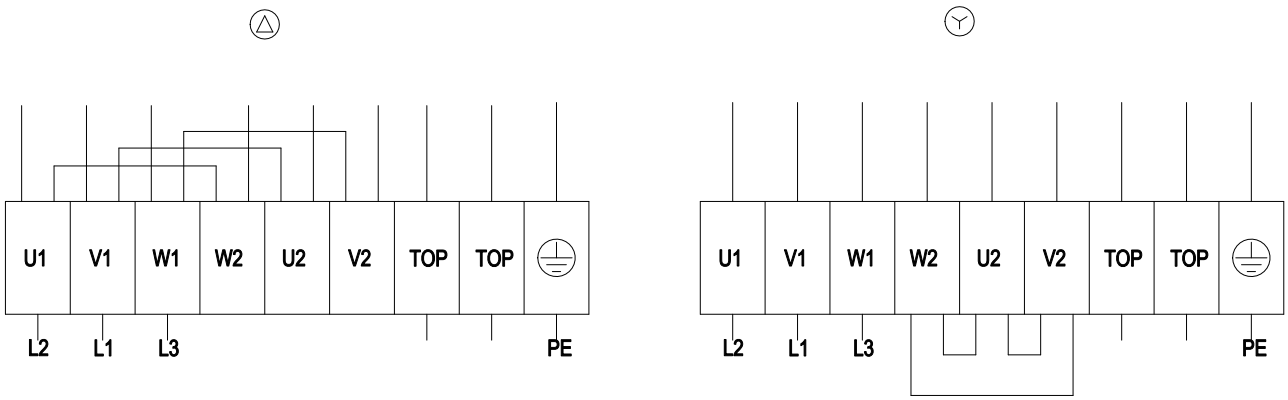


| | | | | | |
|---|---|---|---|---|---|
| Δ | Delta connection | Y | Star connection | L1 | = V1 = blue |
| L2 | = U1 = black | L3 | = W1 = brown | W2 | yellow |
| U2 | green | V2 | white | TOP | 2 x grey |
| PE | green/yellow | | | | |



ebm-papst Mulfingen GmbH & Co. KG · Bachmühle 2 · D-74673 Mulfingen · Phone +49 (0) 7938 81-0 · Fax +49 (0) 7938 81-110 · info1@de.ebmpapst.com · www.ebmpapst.com

# AC axial fan - HyBlade®

sickled blades (S series)

with full square nozzle

## Charts: Air flow 50 Hz

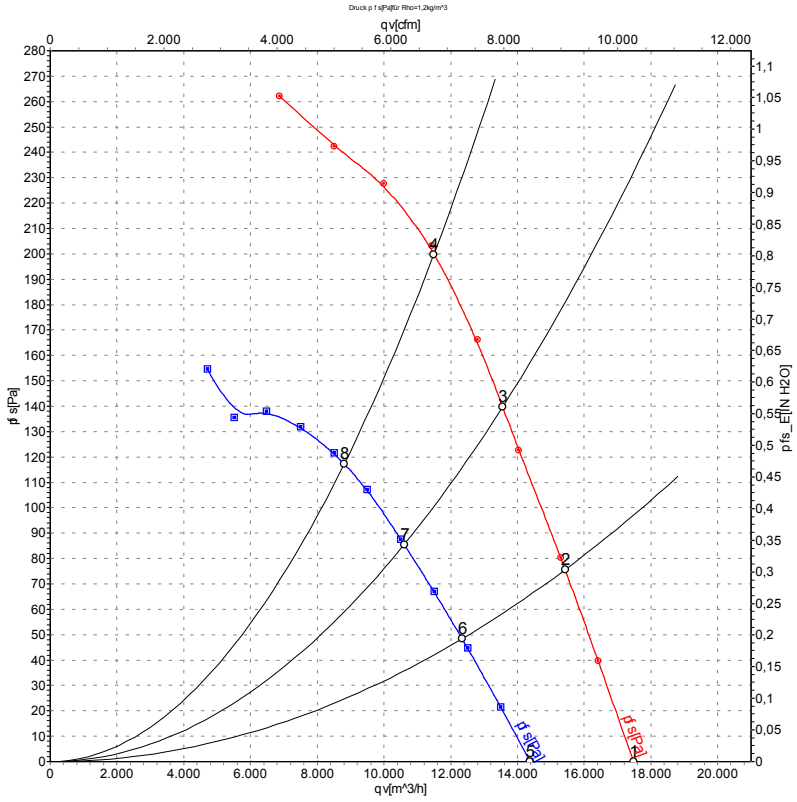


Measurement: LU-109476
Measurement: LU-109489

Air performance measured as per ISO 5801 Installation category A. For detailed information on the measuring set-up, please contact ebm-papst. Suction-side noise levels: LwA measured as per ISO 13347 / LpA measured with 1m distance to fan axis. The values given are valid under the measuring conditions mentioned above and may vary according to the actual installation situation. With any deviation from the standard set-up, the specific values have to be checked and reviewed with the unit installed.

## Measured values

| | Conn. | U | f | n | $P_e$ | I | $LpA_{in}$ | $LwA_{in}$ | $LwA_{out}$ | qv | $p_{fs}$ |
|---|---|---|---|---|---|---|---|---|---|---|---|
| | | V | Hz | $min^{-1}$ | W | A | dB(A) | dB(A) | dB(A) | $m^3/h$ | Pa |
| 1 | Δ | 400 | 50 | 1370 | 1482 | 2.72 | 70 | 77 | 78 | 17480 | 0 |
| 2 | Δ | 400 | 50 | 1345 | 1680 | 2.94 | 69 | 75 | 76 | 15430 | 75 |
| 3 | Δ | 400 | 50 | 1325 | 1830 | 3.18 | 69 | 75 | 76 | 13560 | 140 |
| 4 | Δ | 400 | 50 | 1310 | 1970 | 3.40 | 71 | 78 | 77 | 11500 | 200 |
| 5 | Y | 400 | 50 | 1125 | 1079 | 1.80 | 65 | 72 | 72 | 14380 | 0 |
| 6 | Y | 400 | 50 | 1075 | 1178 | 1.97 | 63 | 70 | 70 | 12340 | 48 |
| 7 | Y | 400 | 50 | 1035 | 1235 | 2.08 | 62 | 68 | 69 | 10600 | 86 |
| 8 | Y | 400 | 50 | 1000 | 1290 | 2.10 | 63 | 70 | 70 | 8805 | 115 |

Conn. = Connection · U = Supply voltage · f = Frequency · n = Speed · $P_e$ = Power input · I = Current draw · $LpA_{in}$ = Sound pressure level inlet side · $LwA_{in}$ = Sound power level inlet side
$LwA_{out}$ = Sound power level outlet side · qv = Air flow · $p_{fs}$ = Pressure increase



ebm-papst Mulfingen GmbH & Co. KG · Bachmühle 2 · D-74673 Mulfingen · Phone +49 (0) 7938 81-0 · Fax +49 (0) 7938 81-110 · info1@de.ebmpapst.com · www.ebmpapst.com