W4D630-GL03-05

AC axial fan

sickled blades (S series)

with full square nozzle

ebm-papst Mulfingen GmbH & Co. KG
Bachmühle 2 · D-74673 Mulfingen
Phone +49 7938 81-0
Fax +49 7938 81-110
info1@de.ebmpapst.com
www.ebmpapst.com

Limited partnership · Headquarters Mulfingen
County court Stuttgart · HRA 590344

General partner: Elektrobau Mulfingen GmbH · Headquarters Mulfingen
County court Stuttgart · HRB 590142

ErP2015 EXCEEDS THE NORM

Nominal data

Type	**W4D630-GL03-05**
Motor	**M4D138-LA**

Phase		3~	3~	3~	3~	3~	3~
Nominal voltage	VAC	230	230	277	400	400	480
Connection		**Δ**	**Δ**	**Δ**	Y	Y	Y
Frequency	Hz	50	60	60	50	60	60
Type of data definition		ml	ml	ml	ml	ml	ml
Valid for approval / standard		CE	CE	CE	CE	CE	CE
Speed	min^{-1}	1400	1585	1650	1400	1585	1650
Power input	W	1770	2670	2910	1770	2670	2910
Current draw	A	7.1	8.52	8.5	4.1	4.92	4.91
Max. back pressure	Pa	250	325	350	250	325	350
Max. ambient temperature	°C	85	60	60	85	60	60

ml = max. load · me = max. efficiency · fa = running at free air · cs = customer specs · cu = customer unit
Subject to alterations

Data according to ErP directive

Installation category	A
Efficiency category	Static
Variable speed drive integrated	No
Specific ratio*	1,00

* Specific ratio = 1 + p_{fs} / 100 000 Pa

		Actual	Request 2013	Request 2015
Overall efficiency η_{es}		38,2	31,1	35,1
Efficiency grade N		43,1	36	40
Power input P_e	kW	1,67		
Air flow q_v	m^3/h	11045		
Pressure increase p_{fs}	Pa	209		
Speed n	min^{-1}	1405		

Data established at point of optimum efficiency

AC axial fan

sickled blades (S series)

with full square nozzle

Technical features

Mass	40.2 kg
Size	630 mm
Surface of rotor	Cast in aluminium
Material of terminal box	PC / ABS plastic
Material of blades	Die-cast aluminum
Material of wall ring	Sheet steel, pre-galvanised and coated in black plastic (RAL 9005)
Material of guard grille	Sheet steel, pre-galvanised and coated in black plastic (RAL 9005)
Number of blades	5
Blade angle	- 10
Direction of air flow	"V"
Direction of rotation	Clockwise, seen on rotor
Type of protection	IP 54
Insulation class	"F"
Humidity class	F3-1
Max. permissible ambient motor temp. (transp./ storage)	+80 °C
Min. permissible ambient motor temp. (transp./storage)	- 40 °C
Mounting position	Any
Condensate discharge holes	On rotor and stator sides
Operation mode	S1
Motor bearing	Ball bearing
Leakage current	<= 3.5 mA
Electrical leads	Via terminal box
Motor protection	Thermal overload protector (TOP) brought out
Cable exit	Axial
Protection class	I (if protective earth is connected by customer)
Product conforming to standard	EN 60034; EN 61800-5-1; CE
Approval	CSA C22.2 Nr.100; UL 1004-1; VDE

ebm-papst Mulfingen GmbH & Co. KG · Bachmühle 2 · D-74673 Mulfingen · Phone +49 7938 81-0 · Fax +49 7938 81-110 · info1@de.ebmpapst.com · www.ebmpapst.com

AC axial fan

sickled blades (S series)

with full square nozzle

Product drawing

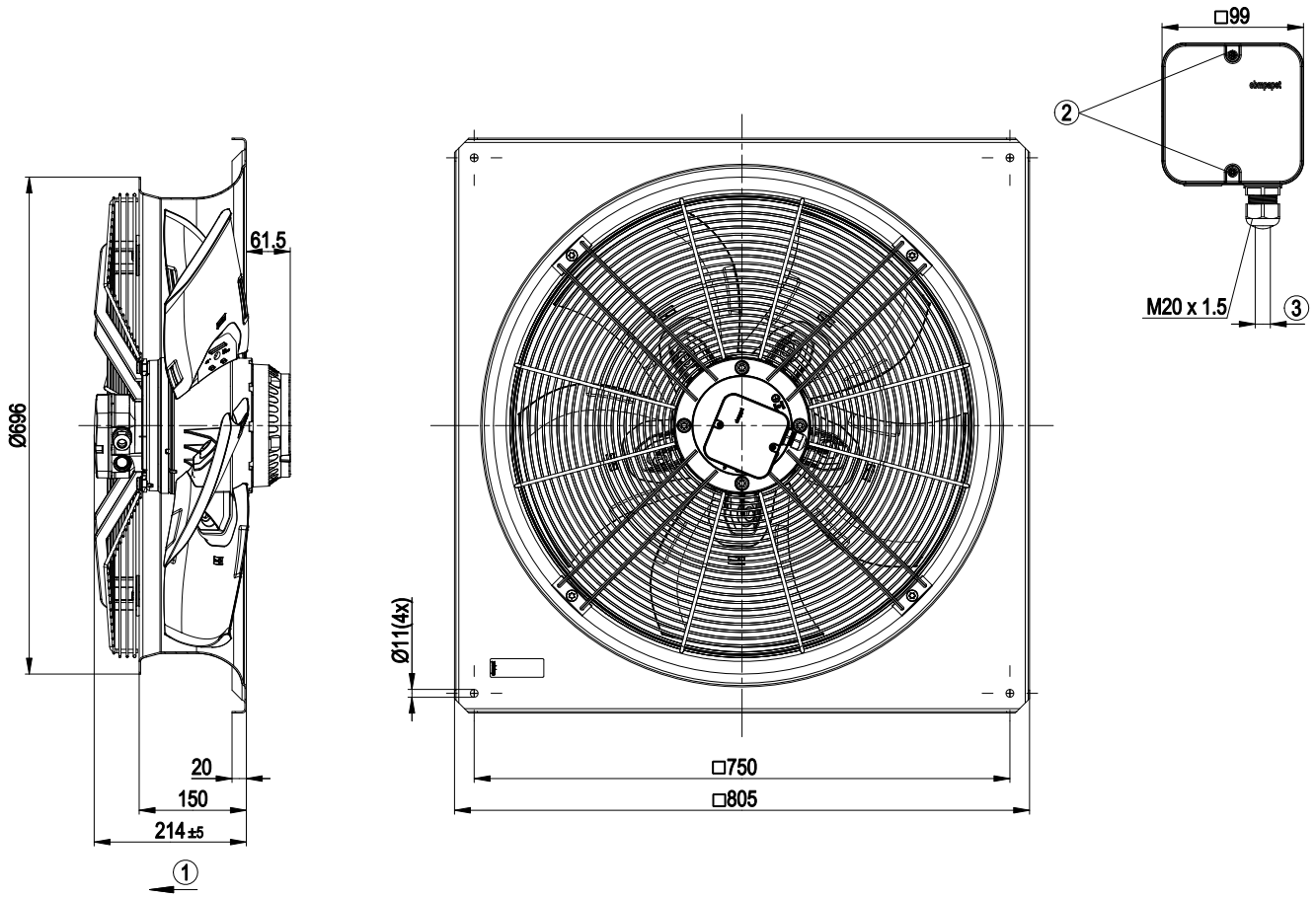

1	Direction of air flow "V"
2	Tightening torque 1.5±0.2 Nm
3	Cable diameter: min. 7 mm, max. 14 mm, tightening torque: 2±0.3 Nm

ebm-papst Mulfingen GmbH & Co. KG · Bachmühle 2 · D-74673 Mulfingen · Phone +49 7938 81-0 · Fax +49 7938 81-110 · info1@de.ebmpapst.com · www.ebmpapst.com

AC axial fan

sickled blades (S series)

with full square nozzle

Connection screen

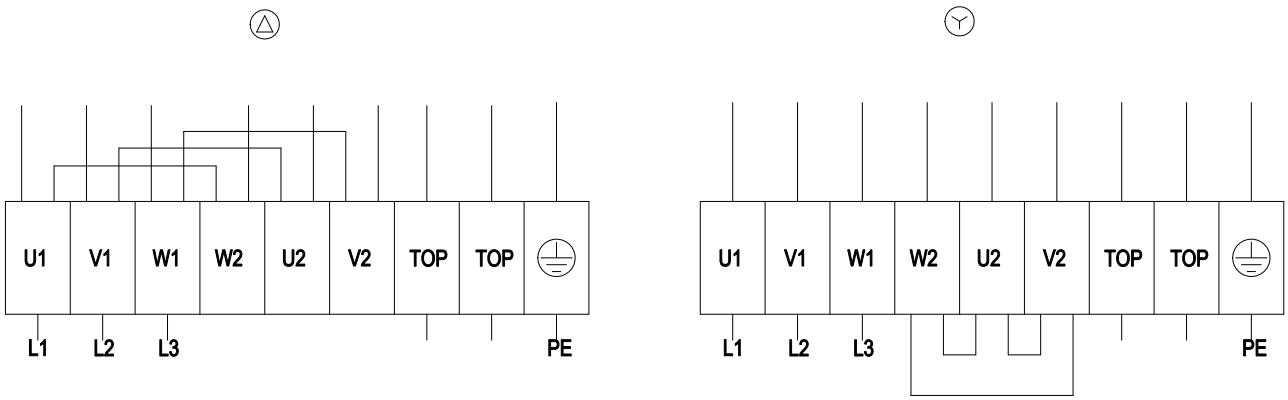

Δ	Delta connection	Y	Star connection	L1	= U1 = black
L2	= V1 = blue	L3	= W1 = brown	W2	yellow
U2	green	V2	white	TOP	2 x grey
PE	green/yellow				

ebm-papst Mulfingen GmbH & Co. KG · Bachmühle 2 · D-74673 Mulfingen · Phone +49 7938 81-0 · Fax +49 7938 81-110 · info1@de.ebmpapst.com · www.ebmpapst.com

AC axial fan

sickled blades (S series)

with full square nozzle

Charts: Air flow 50 Hz

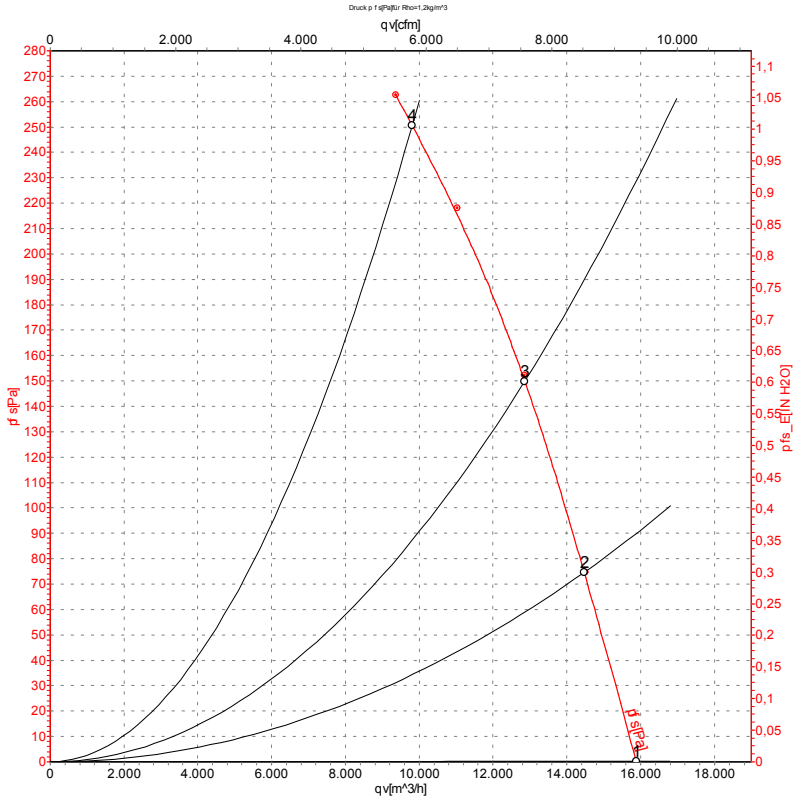

Measurement: LU-101583

Air performance measured as per ISO 5801 Installation category A. For detailed information on the measuring set-up, please contact ebm-papst. Suction-side noise levels: LwA measured as per ISO 13347 / LpA measured with 1m distance to fan axis. The values given are valid under the measuring conditions mentioned above and may vary according to the actual installation situation. With any deviation from the standard set-up, the specific values have to be checked and reviewed with the unit installed.

Measured values

	Conn.	U	f	n	P_e	I	LpA_{in}	LwA_{in}	qv	p_{fs}
		V	Hz	min^{-1}	W	A	dB(A)	dB(A)	m^3/h	Pa
1	Y	400	50	1445	1138	3.45	74	80	15880	0
2	Y	400	50	1430	1331	3.57	70	76	14470	76
3	Y	400	50	1415	1521	3.79	70	76	12860	152
4	Y	400	50	1400	1770	4.10	76	83	9810	250

ebm-papst Mulfingen GmbH & Co. KG · Bachmühle 2 · D-74673 Mulfingen · Phone +49 7938 81-0 · Fax +49 7938 81-110 · info1@de.ebmpapst.com · www.ebmpapst.com

AC axial fan

sickled blades (S series)

with full square nozzle

Charts: Air flow 60 Hz

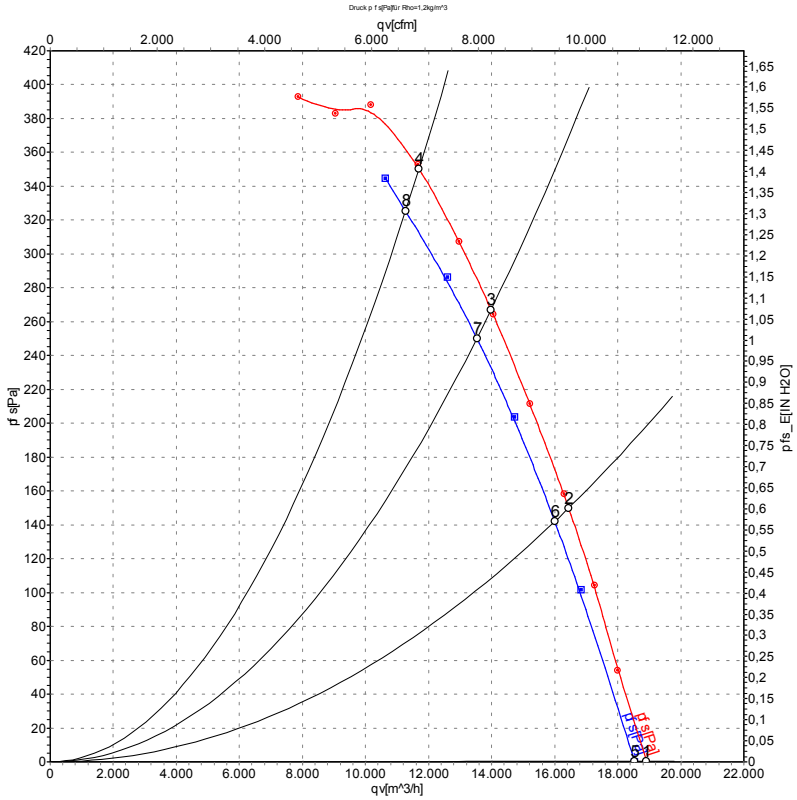

Measurement: LU-101584
Measurement: LU-101640

Air performance measured as per ISO 5801 Installation category A. For detailed information on the measuring set-up, please contact ebm-papst. Suction-side noise levels: LwA measured as per ISO 13347 / LpA measured with 1m distance to fan axis. The values given are valid under the measuring conditions mentioned above and may vary according to the actual installation situation. With any deviation from the standard set-up, the specific values have to be checked and reviewed with the unit installed.

Measured values

	Conn.	U	f	n	P_e	I	LpA_{in}	LwA_{in}	qv	p_{fs}
		V	Hz	min^{-1}	W	A	dB(A)	dB(A)	m^3/h	Pa
1	Y	480	60	1715	1850	3.78	78	84	18920	0
2	Y	480	60	1690	2306	4.24	73	80	16440	150
3	Y	480	60	1665	2665	4.63	76	83	13980	265
4	Y	480	60	1650	2910	4.91	80	87	11690	350
5	Y	400	60	1680	1716	3.45	78	84	18540	0
6	Y	400	60	1640	2138	4.08	73	80	16000	142
7	Y	400	60	1610	2442	4.56	76	82	13540	250
8	Y	400	60	1585	2670	4.92	79	86	11270	325

ebm-papst Mulfingen GmbH & Co. KG · Bachmühle 2 · D-74673 Mulfingen · Phone +49 7938 81-0 · Fax +49 7938 81-110 · info1@de.ebmpapst.com · www.ebmpapst.com