W4D710-DF01-02

AC axial fan - HyBlade®

sickled blades (S series)

with full square nozzle

ebm-papst Mulfingen GmbH & Co. KG
Bachmühle 2 · D-74673 Mulfingen
Phone +49 7938 81-0
Fax +49 7938 81-110
info1@de.ebmpapst.com
www.ebmpapst.com

Limited partnership · Headquarters Mulfingen
County court Stuttgart · HRA 590344

General partner: Elektrobau Mulfingen GmbH · Headquarters Mulfingen
County court Stuttgart · HRB 590142

ErP2015 EXCEEDS THE NORM

Nominal data

Type	**W4D710-DF01-02**
Motor	**M4D138-LA**

Phase		3~	3~
Nominal voltage	VAC	400	400
Connection		**Δ**	Y
Frequency	Hz	50	50
Type of data definition		ml	ml
Valid for approval / standard		CE	CE
Speed	min^{-1}	1350	1095
Power input	W	2380	1660
Current draw	A	4.5	2.76
Max. back pressure	Pa	250	160
Max. ambient temperature	°C	60	60

ml = max. load · me = max. efficiency · fa = running at free air · cs = customer specs · cu = customer unit
Subject to alterations

Data according to ErP directive

Installation category	A
Efficiency category	Static
Variable speed drive integrated	No
Specific ratio*	1,00

* Specific ratio = 1 + p_{fs} / 100 000

		Actual	Request 2013	Request 2015
Overall efficiency η_{es}		36,7	32	36
Efficiency grade N		40,7	36	40
Power input P_e	kW	2,34		
Air flow q_v	m^3/h	13480		
Pressure increase p_{fs}	Pa	231		
Speed n	min^{-1}	1355		

Data established at point of optimum efficiency

AC axial fan - HyBlade®

sickled blades (S series)

with full square nozzle

Technical features

Mass	40.9 kg
Size	710 mm
Surface of rotor	Cast in aluminium
Material of terminal box	Plastic, fibreglass reinforced
Material of blades	Aluminium sheet insert, sprayed with PP plastic
Material of wall ring	Sheet steel, pre-galvanised and coated in black plastic
Material of guard grille	Steel, coated in black plastic (RAL9005)
Number of blades	5
Blade angle	-10°
Direction of air flow	"A"
Direction of rotation	Counter-clockwise, seen on rotor
Type of protection	IP 54
Insulation class	"F"
Humidity class	F3-1
Max. permissible ambient motor temp. (transp./ storage)	+80 °C
Min. permissible ambient motor temp. (transp./storage)	-40 °C
Mounting position	Any
Condensate discharge holes	On rotor and stator sides
Operation mode	S1
Motor bearing	Ball bearing
Leakage current	<= 3.5 mA
Electrical leads	Via terminal box
Motor protection	Thermal overload protector (TOP) brought out
Cable exit	Axial
Protection class	I (if protective earth is connected by customer)
Product conforming to standard	EN 61800-5-1; EN 60034; CE
Approval	VDE

ebm-papst Mulfingen GmbH & Co. KG · Bachmühle 2 · D-74673 Mulfingen · Phone +49 7938 81-0 · Fax +49 7938 81-110 · info1@de.ebmpapst.com · www.ebmpapst.com

AC axial fan - HyBlade®

sickled blades (S series)

with full square nozzle

Product drawing

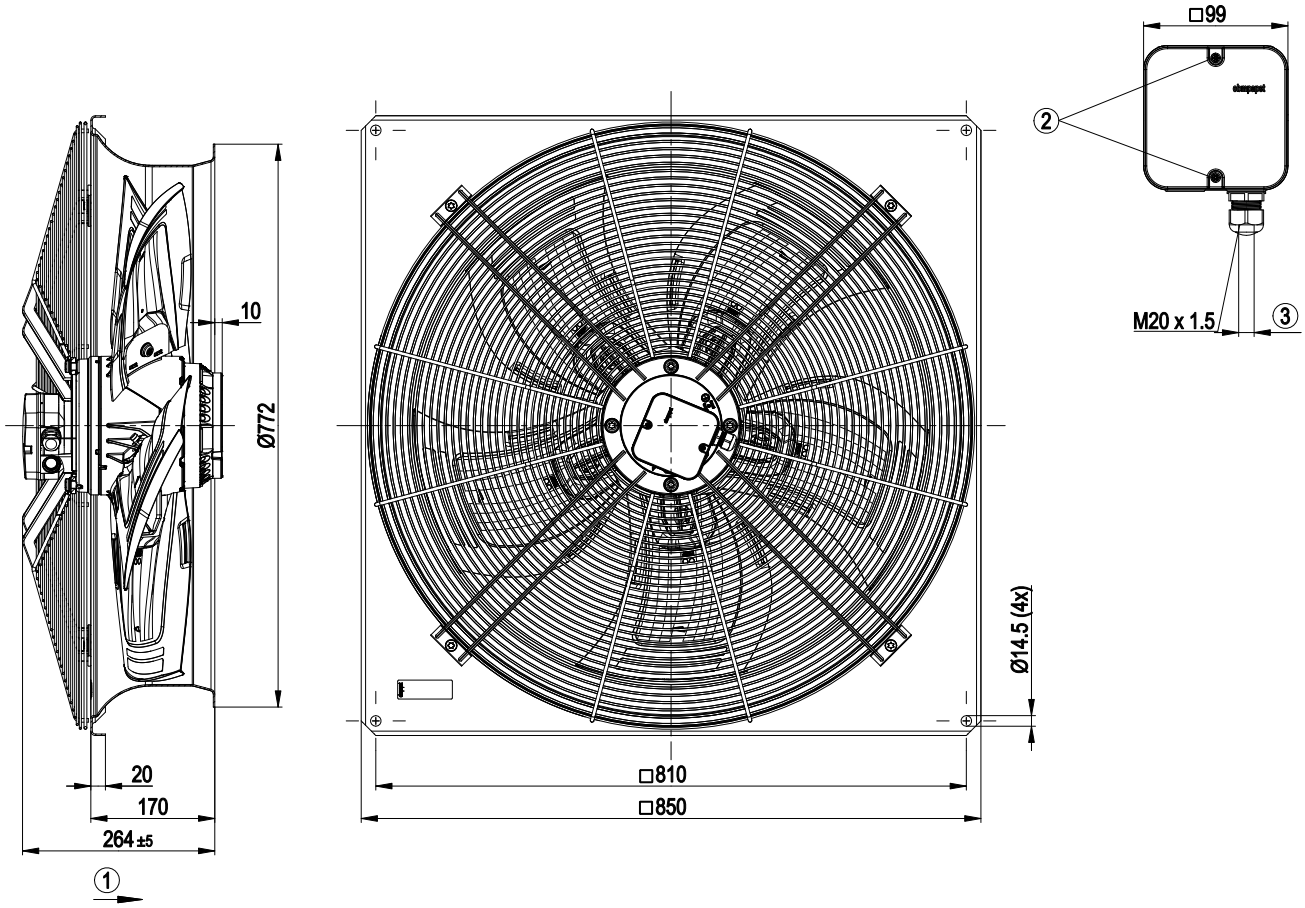

1	Direction of air flow "A"
2	Tightening torque 1.5±0.2 Nm
3	Cable diameter: min. 7 mm, max. 14 mm; tightening torque: 2±0.3 Nm

ebm-papst Mulfingen GmbH & Co. KG · Bachmühle 2 · D-74673 Mulfingen · Phone +49 7938 81-0 · Fax +49 7938 81-110 · info1@de.ebmpapst.com · www.ebmpapst.com

AC axial fan - HyBlade®

sickled blades (S series)

with full square nozzle

Connection screen

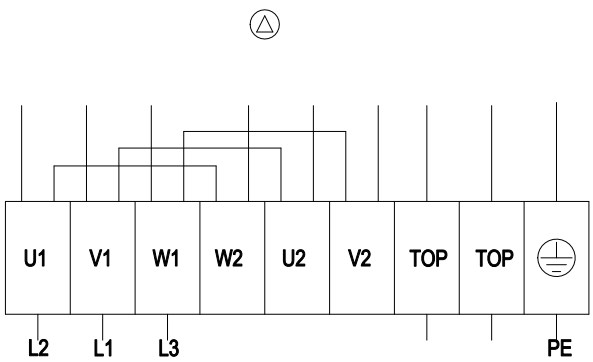

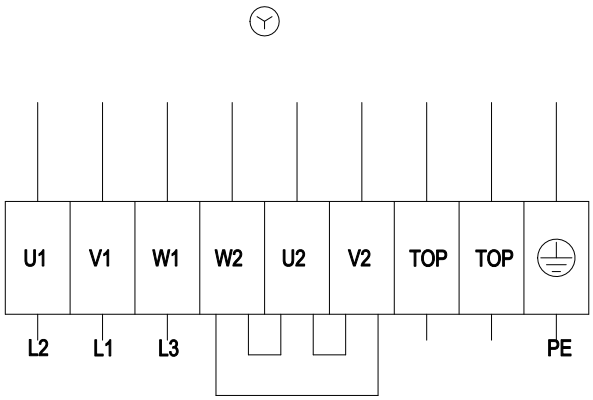

Note: Direction of rotation changes when two phases are reversed

Δ	Delta connection	Y	Star connection	L1	= V1 = blue
L2	= U1 = black	L3	= W1 = brown	W2	yellow
U2	green	V2	white	TW	2 x grey
PE	green/yellow				

ebm-papst Mulfingen GmbH & Co. KG · Bachmühle 2 · D-74673 Mulfingen · Phone +49 7938 81-0 · Fax +49 7938 81-110 · info1@de.ebmpapst.com · www.ebmpapst.com

AC axial fan - HyBlade®

sickled blades (S series)

with full square nozzle

Charts: Air flow 50 Hz

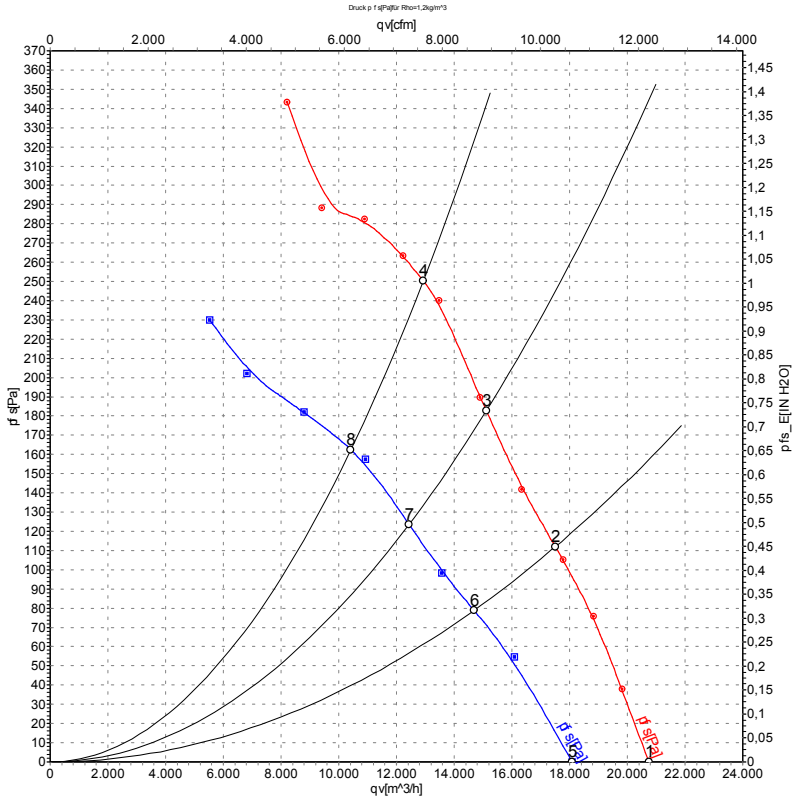

Measurement: LU-122073
Measurement: LU-122081

Air performance measured as per ISO 5801 Installation category A. For detailed information on the measuring set-up, please contact ebm-papst. Suction-side noise levels: LwA measured as per ISO 13347 / LpA measured with 1m distance to fan axis. The values given are valid under the measuring conditions mentioned above and may vary according to the actual installation situation. With any deviation from the standard set-up, the specific values have to be checked and reviewed with the unit installed.

Measured values

	Conn.	U	f	n	P_e	I	LpA_{in}	LwA_{in}	LwA_{out}	qv	p_{fs}
		V	Hz	min^{-1}	W	A	dB(A)	dB(A)	dB(A)	m^3/h	Pa
1	Δ	400	50	1415	1570	3.45	73	80	80	20740	0
2	Δ	400	50	1380	1995	3.92	75	81	81	17510	110
3	Δ	400	50	1365	2227	4.24	77	83	83	15110	180
4	Δ	400	50	1350	2380	4.50	79	86	86	12930	250
5	Y	400	50	1240	1230	2.09	70	77	77	18090	0
6	Y	400	50	1165	1474	2.50	69	76	76	14690	79
7	Y	400	50	1125	1590	2.71	71	78	77	12430	124
8	Y	400	50	1095	1660	2.76	74	81	80	10420	160

ebm-papst Mulfingen GmbH & Co. KG · Bachmühle 2 · D-74673 Mulfingen · Phone +49 7938 81-0 · Fax +49 7938 81-110 · info1@de.ebmpapst.com · www.ebmpapst.com