**W4D710-GF01-01**

# AC axial fan - HyBlade®

sickled blades (S series)

with full square nozzle

**ebm-papst Mulfingen GmbH & Co. KG**
Bachmühle 2 · D-74673 Mulfingen
Phone +49 7938 81-0
Fax +49 7938 81-110
info1@de.ebmpapst.com
www.ebmpapst.com

Limited partnership · Headquarters Mulfingen
County court Stuttgart · HRA 590344

General partner: Elektrobau Mulfingen GmbH · Headquarters Mulfingen
County court Stuttgart · HRB 590142

ErP2015 EXCEEDS THE NORM

## Nominal data

| | |
|---|---|
| **Type** | **W4D710-GF01-01** |
| **Motor** | **M4D138-LA** |

| | | | |
|---|---|---|---|
| Phase | | 3~ | 3~ |
| Nominal voltage | VAC | 400 | 400 |
| Connection | | **Δ** | Y |
| Frequency | Hz | 50 | 50 |
| Type of data definition | | ml | ml |
| Valid for approval / standard | | CE | CE |
| Speed | $min^{-1}$ | 1350 | 1095 |
| Power input | W | 2380 | 1660 |
| Current draw | A | 4.5 | 2.76 |
| Max. back pressure | Pa | 250 | 160 |
| Max. ambient temperature | °C | 60 | 60 |

ml = max. load · me = max. efficiency · fa = running at free air · cs = customer specs · cu = customer unit
Subject to alterations

## Data according to ErP directive

| | |
|---|---|
| Installation category | A |
| Efficiency category | Static |
| Variable speed drive integrated | No |
| Specific ratio* | 1,00 |

* Specific ratio = 1 + $p_{fs}$ / 100 000 Pa

| | | Actual | Request 2013 | Request 2015 |
|---|---|---|---|---|
| Overall efficiency $\eta_{es}$ | | 36,7 | 32 | 36 |
| Efficiency grade N | | 40,7 | 36 | 40 |
| Power input $P_e$ | kW | 2,34 | | |
| Air flow $q_v$ | $m^3/h$ | 13480 | | |
| Pressure increase $p_{fs}$ | Pa | 231 | | |
| Speed n | $min^{-1}$ | 1355 | | |

Data established at point of optimum efficiency

# AC axial fan - HyBlade®

sickled blades (S series)

with full square nozzle

## Technical features

| | |
|---|---|
| **Mass** | 41.4 kg |
| **Size** | 710 mm |
| **Surface of rotor** | Cast in aluminium |
| **Material of terminal box** | PP plastic |
| **Material of blades** | Aluminium sheet insert, sprayed with PP plastic |
| **Material of wall ring** | Sheet steel, pre-galvanised and coated in black plastic (RAL 9005) |
| **Material of guard grille** | Sheet steel, pre-galvanised and coated in black plastic (RAL 9005) |
| **Number of blades** | 5 |
| **Blade angle** | -10° |
| **Direction of air flow** | "V" |
| **Direction of rotation** | Clockwise, seen on rotor |
| **Type of protection** | IP 54 |
| **Insulation class** | "F" |
| **Humidity class** | F3-1 |
| **Max. permissible ambient motor temp. (transp./ storage)** | + 80 °C |
| **Min. permissible ambient motor temp. (transp./storage)** | - 40 °C |
| **Mounting position** | Any |
| **Condensate discharge holes** | On rotor and stator sides |
| **Operation mode** | S1 |
| **Motor bearing** | Ball bearing |
| **Leakage current** | <= 3.5 mA |
| **Electrical leads** | Via terminal box |
| **Motor protection** | Thermal overload protector (TOP) brought out |
| **Cable exit** | Axial |
| **Protection class** | I (if protective earth is connected by customer) |
| **Product conforming to standard** | EN 60034; EN 61800-5-1; CE |
| **Approval** | VDE |



ebm-papst Mulfingen GmbH & Co. KG · Bachmühle 2 · D-74673 Mulfingen · Phone +49 7938 81-0 · Fax +49 7938 81-110 · info1@de.ebmpapst.com · www.ebmpapst.com

# AC axial fan - HyBlade®

sickled blades (S series)

with full square nozzle

## Product drawing

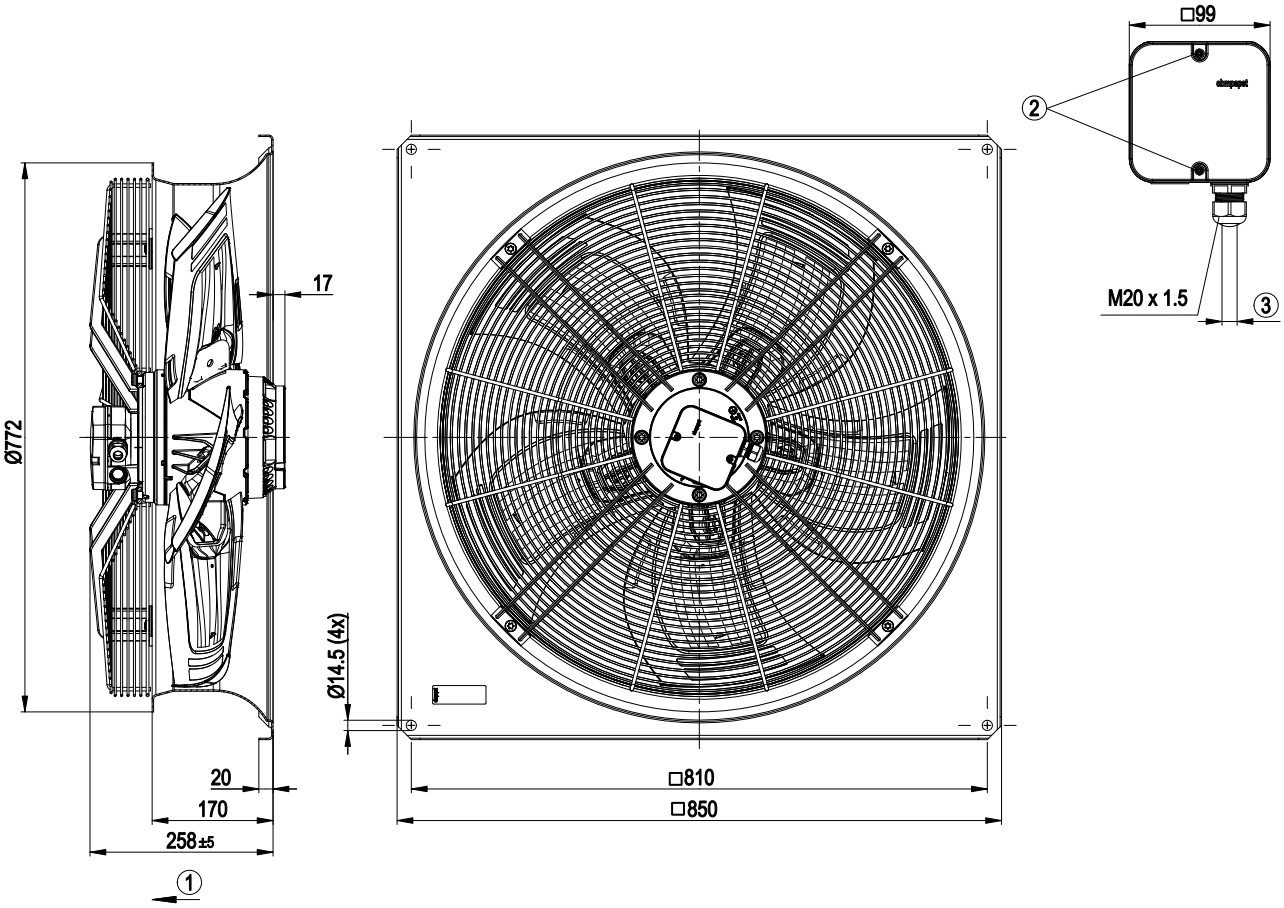


| | |
|---|---|
| 1 | Direction of air flow "V" |
| 2 | Tightening torque 1.5±0.2 Nm |
| 3 | Cable diameter: min. 7 mm, max. 14 mm, tightening torque: 2±0.3 Nm |



ebm-papst Mulfingen GmbH & Co. KG · Bachmühle 2 · D-74673 Mulfingen · Phone +49 7938 81-0 · Fax +49 7938 81-110 · info1@de.ebmpapst.com · www.ebmpapst.com

# AC axial fan - HyBlade®

sickled blades (S series)

with full square nozzle

## Connection screen

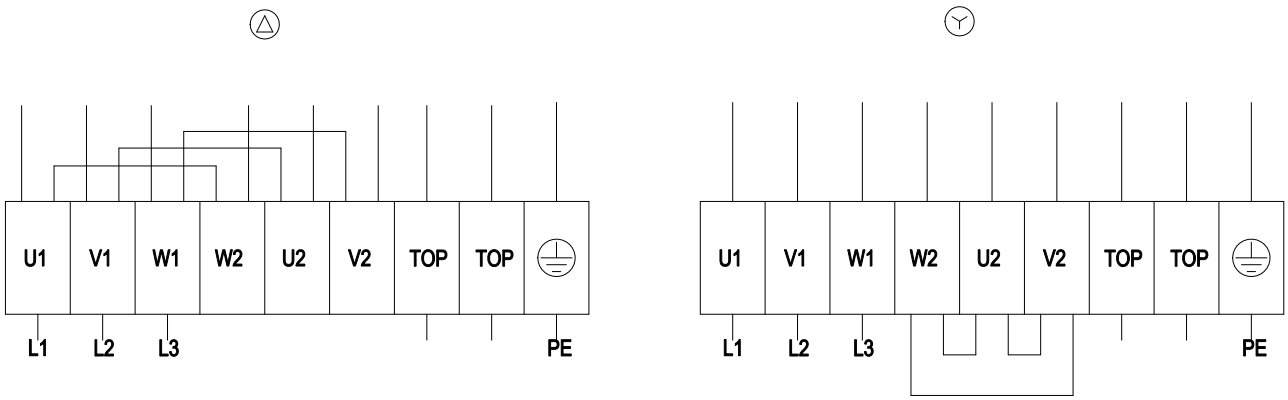


| | | | | | |
|---|---|---|---|---|---|
| Δ | Delta connection | Y | Star connection | L1 | = U1 = black |
| L2 | = V1 = blue | L3 | = W1 = brown | W2 | yellow |
| U2 | green | V2 | white | TOP | 2 x grey |
| PE | green/yellow | | | | |



ebm-papst Mulfingen GmbH & Co. KG · Bachmühle 2 · D-74673 Mulfingen · Phone +49 7938 81-0 · Fax +49 7938 81-110 · info1@de.ebmpapst.com · www.ebmpapst.com

# AC axial fan - HyBlade®

sickled blades (S series)

with full square nozzle

## Charts: Air flow 50 Hz

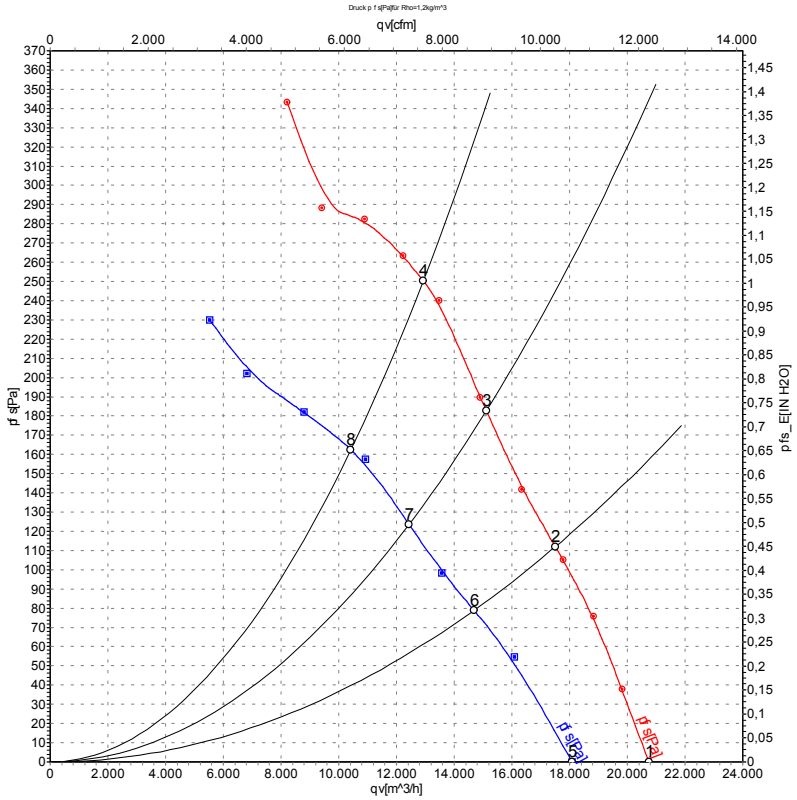


Measurement: LU-122073
Measurement: LU-122081

Air performance measured as per ISO 5801 Installation category A. For detailed information on the measuring set-up, please contact ebm-papst. Suction-side noise levels: LwA measured as per ISO 13347 / LpA measured with 1m distance to fan axis. The values given are valid under the measuring conditions mentioned above and may vary according to the actual installation situation. With any deviation from the standard set-up, the specific values have to be checked and reviewed with the unit installed.

## Measured values

| | Conn. | U | f | n | $P_e$ | I | $LpA_{in}$ | $LwA_{in}$ | $LwA_{out}$ | qv | $p_{fs}$ |
|---|---|---|---|---|---|---|---|---|---|---|---|
| | | V | Hz | $min^{-1}$ | W | A | dB(A) | dB(A) | dB(A) | $m^3/h$ | Pa |
| 1 | Δ | 400 | 50 | 1415 | 1570 | 3.45 | 73 | 80 | 80 | 20740 | 0 |
| 2 | Δ | 400 | 50 | 1380 | 1995 | 3.92 | 75 | 81 | 81 | 17510 | 110 |
| 3 | Δ | 400 | 50 | 1365 | 2227 | 4.24 | 77 | 83 | 83 | 15110 | 180 |
| 4 | Δ | 400 | 50 | 1350 | 2380 | 4.50 | 79 | 86 | 86 | 12930 | 250 |
| 5 | Y | 400 | 50 | 1240 | 1230 | 2.09 | 70 | 77 | 77 | 18090 | 0 |
| 6 | Y | 400 | 50 | 1165 | 1474 | 2.50 | 69 | 76 | 76 | 14690 | 79 |
| 7 | Y | 400 | 50 | 1125 | 1590 | 2.71 | 71 | 78 | 77 | 12430 | 124 |
| 8 | Y | 400 | 50 | 1095 | 1660 | 2.76 | 74 | 81 | 80 | 10420 | 160 |



ebm-papst Mulfingen GmbH & Co. KG · Bachmühle 2 · D-74673 Mulfingen · Phone +49 7938 81-0 · Fax +49 7938 81-110 · info1@de.ebmpapst.com · www.ebmpapst.com