W4E315-CP18-31

AC axial fan

sickled blades (S series)

with full round nozzle

ebm-papst Mulfingen GmbH & Co. KG
Bachmühle 2 · D-74673 Mulfingen
Phone +49 7938 81-0
Fax +49 7938 81-110
info1@de.ebmpapst.com
www.ebmpapst.com

Limited partnership · Headquarters Mulfingen
County court Stuttgart · HRA 590344

General partner: Elektrobau Mulfingen GmbH · Headquarters Mulfingen
County court Stuttgart · HRB 590142

Nominal data

Type	**W4E315-CP18-31**		
Motor	**M4E068-DF**		
Phase		1~	1~
Nominal voltage	VAC	230	230
Frequency	Hz	50	60
Type of data definition		fa	fa
Valid for approval / standard		CE	CE
Speed	min^{-1}	1410	1650
Power input	W	102	120
Current draw	A	0.52	0.53
Motor capacitor	µF	4	4
Capacitor voltage	VDB	400	400
Max. back pressure	Pa	120	120
Min. ambient temperature	°C	-25	-25
Max. ambient temperature	°C	55	55

ml = max. load · me = max. efficiency · fa = running at free air · cs = customer specs · cu = customer unit
Subject to alterations

AC axial fan

sickled blades (S series)

with full round nozzle

Technical features

Mass	4.8 kg
Size	315 mm
Surface of rotor	Coated in black
Material of blades	Sheet steel, coated in black
Material of wall ring	Sheet steel, pre-galvanised and coated in black plastic
Material of guard grille	Steel, phosphated and coated in black plastic
Number of blades	5
Direction of air flow	"A"
Direction of rotation	Clockwise, seen on rotor
Type of protection	IP 44; Depending on installation and position as per EN 60034-5
Insulation class	"B"
Humidity class	F1-2
Max. permissible ambient motor temp. (transp./ storage)	+ 80 °C
Min. permissible ambient motor temp. (transp./storage)	- 40 °C
Mounting position	Shaft horizontal or rotor on bottom
Condensate discharge holes	Rotor-side
Operation mode	S1
Motor bearing	Ball bearing
Leakage current	< 0.75 mA
Motor protection	Thermal overload protector (TOP) wired internally
Cable exit	Axial
Protection class	I (if protective earth is connected by customer)
Product conforming to standard	EN 60335-1; CE

ebm-papst Mulfingen GmbH & Co. KG · Bachmühle 2 · D-74673 Mulfingen · Phone +49 7938 81-0 · Fax +49 7938 81-110 · info1@de.ebmpapst.com · www.ebmpapst.com

AC axial fan

sickled blades (S series)

with full round nozzle

Product drawing

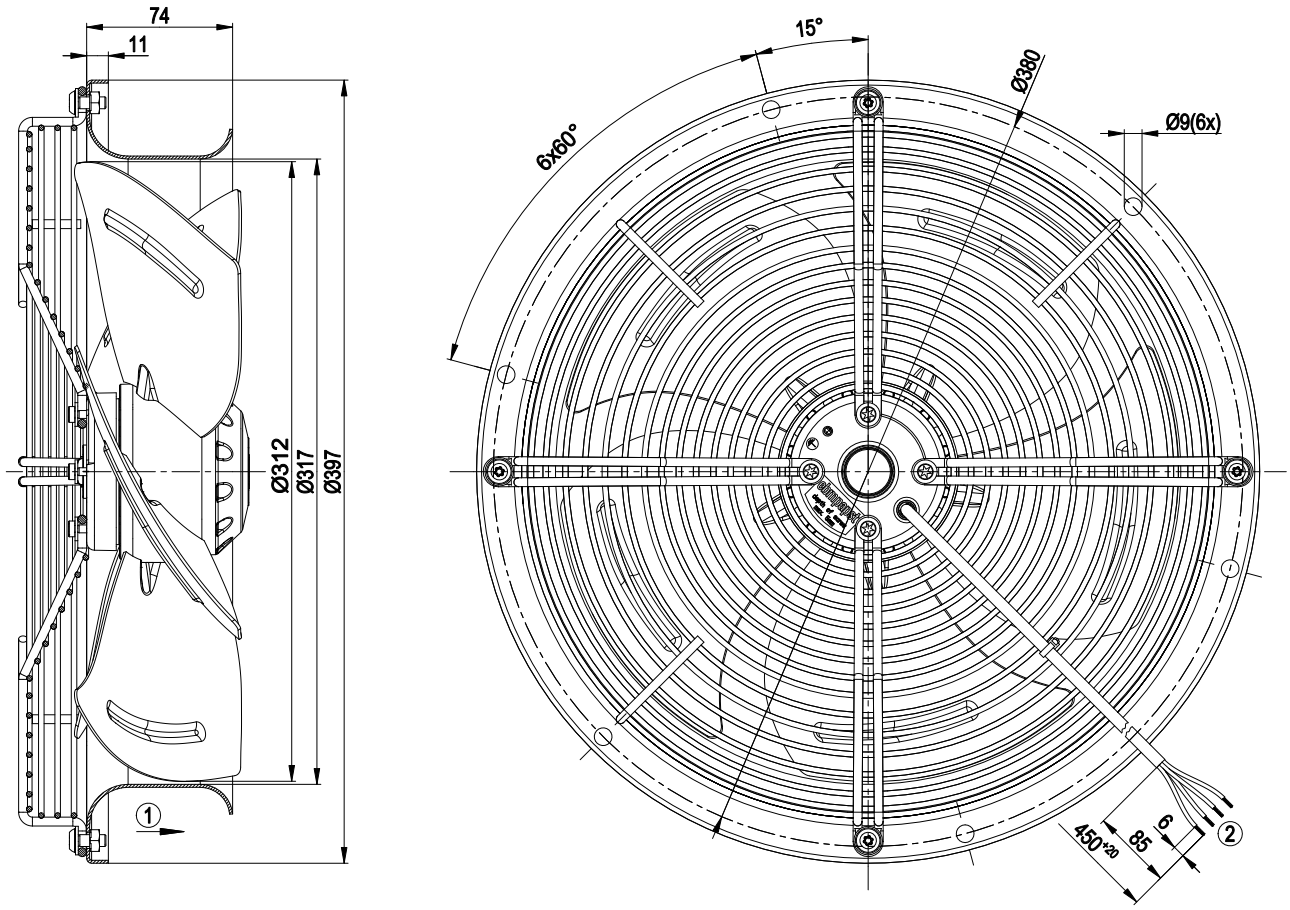

1	Direction of air flow "A"
2	Connection line PVC 4G 0.5mm², 4x brass lead tips crimped

Connection screen

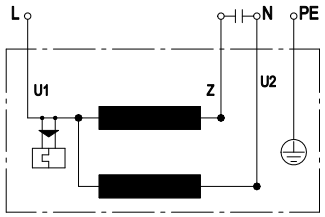

U1	blue	Z	brown	U2	black
PE	green/yellow				

ebm-papst Mulfingen GmbH & Co. KG · Bachmühle 2 · D-74673 Mulfingen · Phone +49 7938 81-0 · Fax +49 7938 81-110 · info1@de.ebmpapst.com · www.ebmpapst.com

AC axial fan

sickled blades (S series)

with full round nozzle

Charts: Air flow 50 Hz

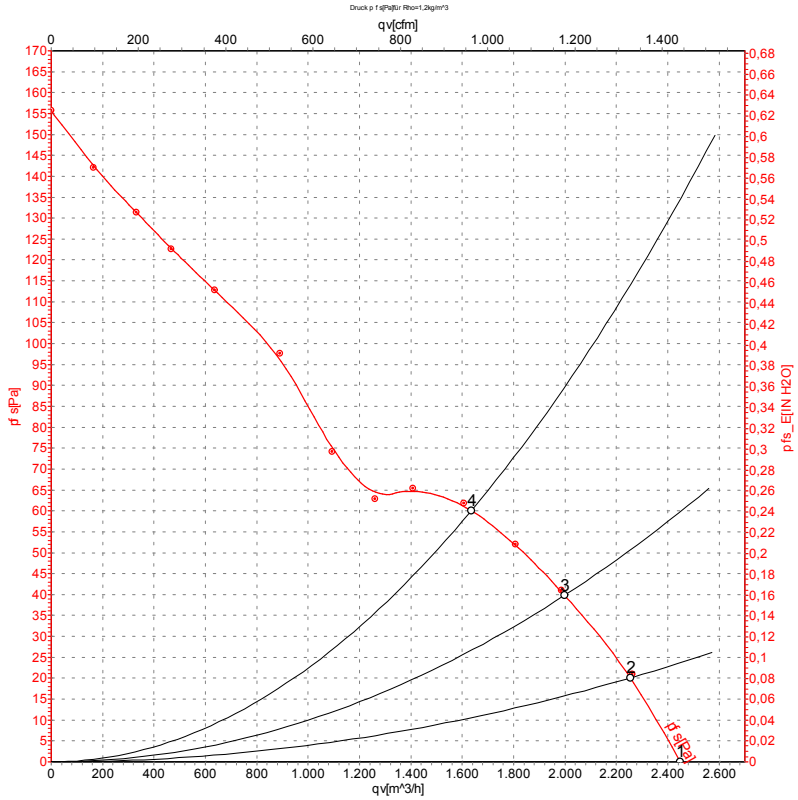

Measurement: LU-32939

Air performance measured as per ISO 5801 Installation category A. For detailed information on the measuring set-up, please contact ebm-papst. Suction-side noise levels: LwA measured as per ISO 13347 / LpA measured with 1m distance to fan axis. The values given are valid under the measuring conditions mentioned above and may vary according to the actual installation situation. With any deviation from the standard set-up, the specific values have to be checked and reviewed with the unit installed.

Measured values

	U	f	n	P_e	I	qv	p_{fs}
	V	Hz	min^{-1}	W	A	m^3/h	Pa
1	230	50	1410	102	0.52	2450	0
2	230	50	1410	107	0.53	2255	20
3	230	50	1395	112	0.54	2000	40
4	230	50	1380	120	0.56	1635	60

ebm-papst Mulfingen GmbH & Co. KG · Bachmühle 2 · D-74673 Mulfingen · Phone +49 7938 81-0 · Fax +49 7938 81-110 · info1@de.ebmpapst.com · www.ebmpapst.com

AC axial fan

sickled blades (S series)

with full round nozzle

Charts: Air flow 60 Hz

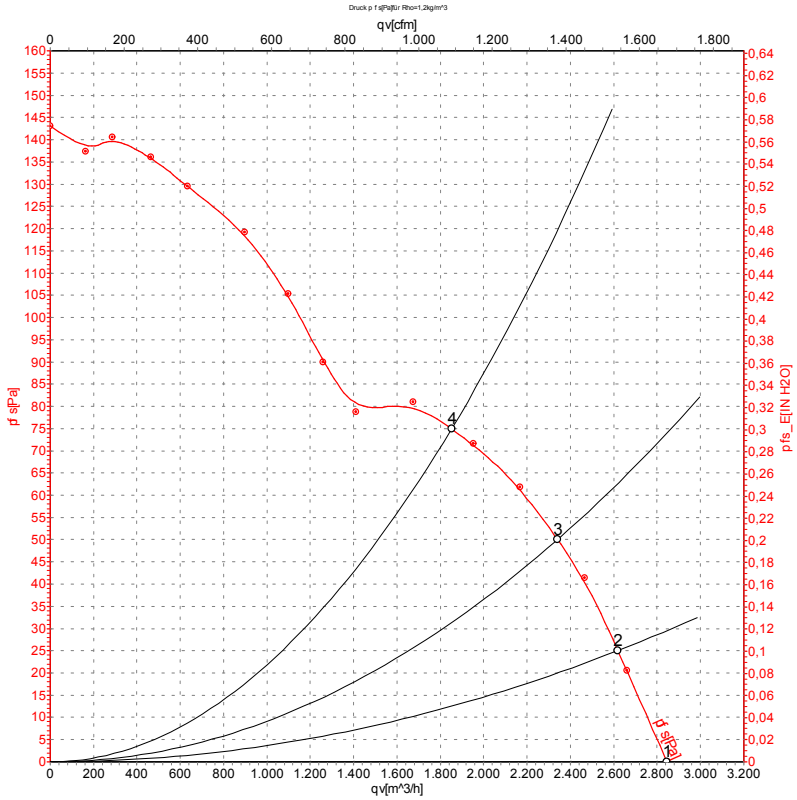

Measurement: LU-32940

Air performance measured as per ISO 5801 Installation category A. For detailed information on the measuring set-up, please contact ebm-papst. Suction-side noise levels: LwA measured as per ISO 13347 / LpA measured with 1m distance to fan axis. The values given are valid under the measuring conditions mentioned above and may vary according to the actual installation situation. With any deviation from the standard set-up, the specific values have to be checked and reviewed with the unit installed.

Measured values

	U	f	n	P_e	I	qv	p_{fs}
	V	Hz	min^{-1}	W	A	m^3/h	Pa
1	230	60	1650	120	0.53	2845	0
2	230	60	1635	128	0.55	2620	25
3	230	60	1610	137	0.60	2340	50
4	230	60	1570	153	0.66	1850	75

ebm-papst Mulfingen GmbH & Co. KG · Bachmühle 2 · D-74673 Mulfingen · Phone +49 7938 81-0 · Fax +49 7938 81-110 · info1@de.ebmpapst.com · www.ebmpapst.com