W4E400-CP02-08

AC axial fan

sickled blades (S series)

with full round nozzle

ebm-papst Mulfingen GmbH & Co. KG
Bachmühle 2 · D-74673 Mulfingen
Phone +49 7938 81-0
Fax +49 7938 81-110
info1@de.ebmpapst.com
www.ebmpapst.com

Limited partnership · Headquarters Mulfingen
County court Stuttgart · HRA 590344

General partner Elektrobau Mulfingen GmbH · Headquarters Mulfingen
County court Stuttgart · HRB 590142

ErP2015 EXCEEDS THE NORM

Nominal data

Type	**W4E400-CP02-08**
Motor	**M4E074-EI**

Phase		1~	1~
Nominal voltage	VAC	230	230
Frequency	Hz	50	60
Type of data definition		fa	fa
Valid for approval / standard		CE	CE
Speed	min^{-1}	1430	1700
Power input	W	160	240
Current draw	A	0.73	1.06
Motor capacitor	µF	6	6
Capacitor voltage	VDB	400	400
Capacitor standard		P0 (CE)	P0 (CE)
Max. back pressure	Pa	150	75
Min. ambient temperature	°C	-25	-25
Max. ambient temperature	°C	60	60
Starting current	A	2.0	1.9

ml = Max. load · me = Max. efficiency · fa = Running at free air · cs = Customer specs · cu = Customer unit
Subject to alterations

Data according to ErP directive

Installation category	A
Efficiency category	Static
Variable speed drive	No
Specific ratio*	1.00

* Specific ratio = 1 + p_{fs} / 100 000 Pa

		Actual	Request 2013	Request 2015
Overall efficiency η_{es}	%	31.9	25.3	29.3
Efficiency grade N		42.6	36	40
Power input P_e	kW	0.2		
Air flow q_v	m^3/h	2675		
Pressure increase p_{fs}	Pa	90		
Speed n	min^{-1}	1390		

Data definition with optimum efficiency. LU-30924
The ErP data is determined using a motor-impeller combination in a standardised measurement configuration.

ebmpapst

AC axial fan

sickled blades (S series)

with full round nozzle

Technical features

Mass	8.2 kg
Size	400 mm
Surface of rotor	Coated in black
Material of terminal box	ABS plastic
Material of blades	Sheet steel, coated in black
Material of wall ring	Sheet steel, galvanised and coated in black plastic (RAL 9005)
Material of guard grille	Steel, coated in black plastic (RAL9005)
Number of blades	5
Direction of air flow	"A"
Direction of rotation	Clockwise, seen on rotor
Type of protection	IP 44
Insulation class	"F"
Humidity class	F1-2
Max. permissible ambient motor temp. (transp./ storage)	+ 80 °C
Min. permissible ambient motor temp. (transp./storage)	- 40 °C
Mounting position	Shaft horizontal or rotor on bottom; rotor on top on request
Condensate discharge holes	Rotor-side
Operation mode	S1
Motor bearing	Ball bearing
Touch current acc. IEC 60990 (measuring network Fig. 4, TN system)	< 0.75 mA
Electrical leads	Via terminal box, integrated capacitor connected via terminal box
Motor protection	Thermal overload protector (TOP) wired internally
Cable exit	Variable
Protection class	I (if protective earth is connected by customer)
Product conforming to standard	EN 60034-1 (2004)

ebm-papst Mulfingen GmbH & Co. KG · Bachmühle 2 · D-74673 Mulfingen · Phone +49 (0) 7938 81-0 · Fax +49 (0) 7938 81-110 · info1@de.ebmpapst.com · www.ebmpapst.com

AC axial fan

sickled blades (S series)

with full round nozzle

Product drawing

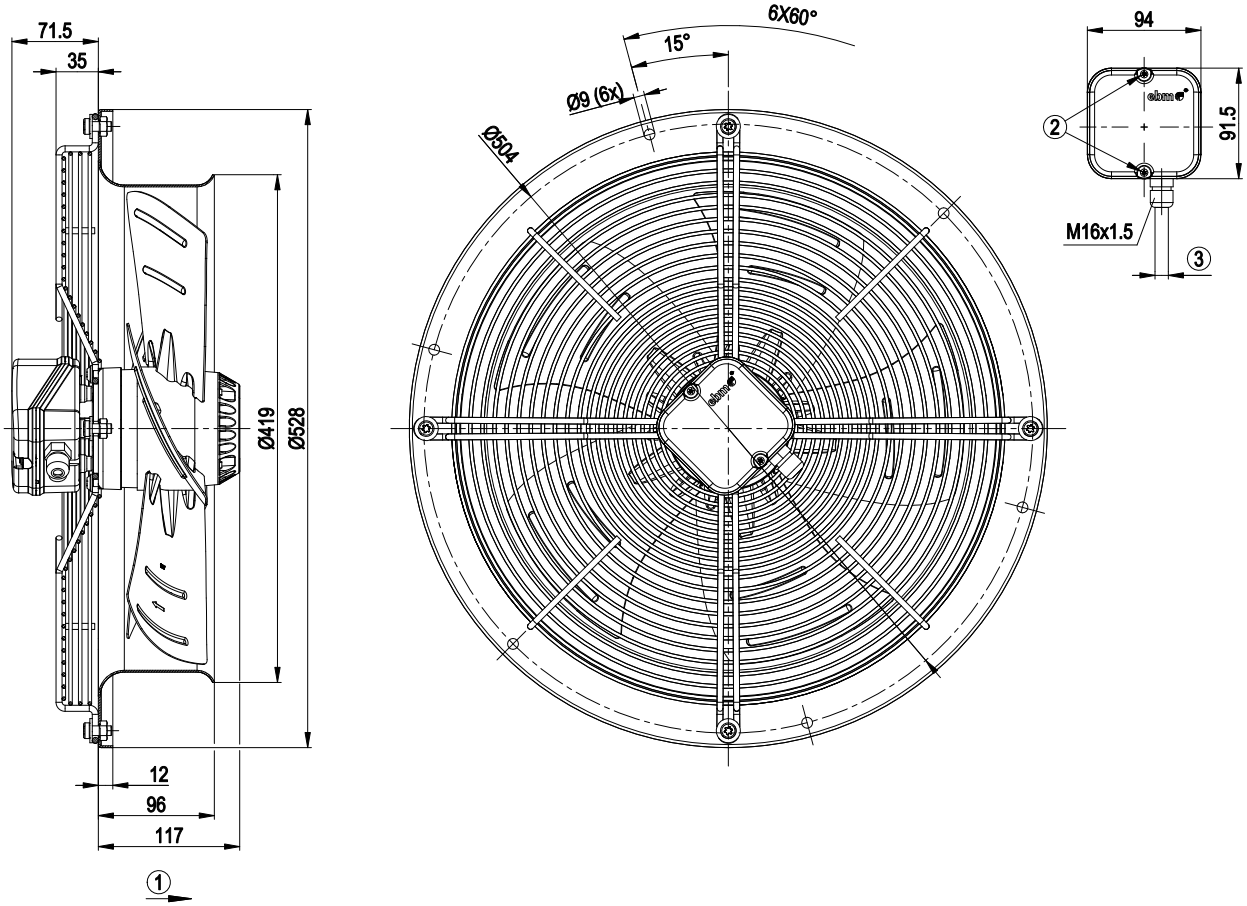

1	Direction of air flow "A"
2	Tightening torque 0.5±0.1 Nm
3	Cable diameter max. 7.5 mm, tightening torque 1.3±0.2 Nm

Connection screen

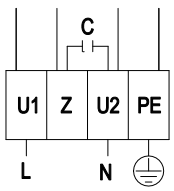

L	= U1 = blue	Z	brown	N	= U2 = black
PE	green/yellow				

ebm-papst Mulfingen GmbH & Co. KG · Bachmühle 2 · D-74673 Mulfingen · Phone +49 (0) 7938 81-0 · Fax +49 (0) 7938 81-110 · info1@de.ebmpapst.com · www.ebmpapst.com

AC axial fan

sickled blades (S series)

with full round nozzle

Charts: Air flow 50 Hz

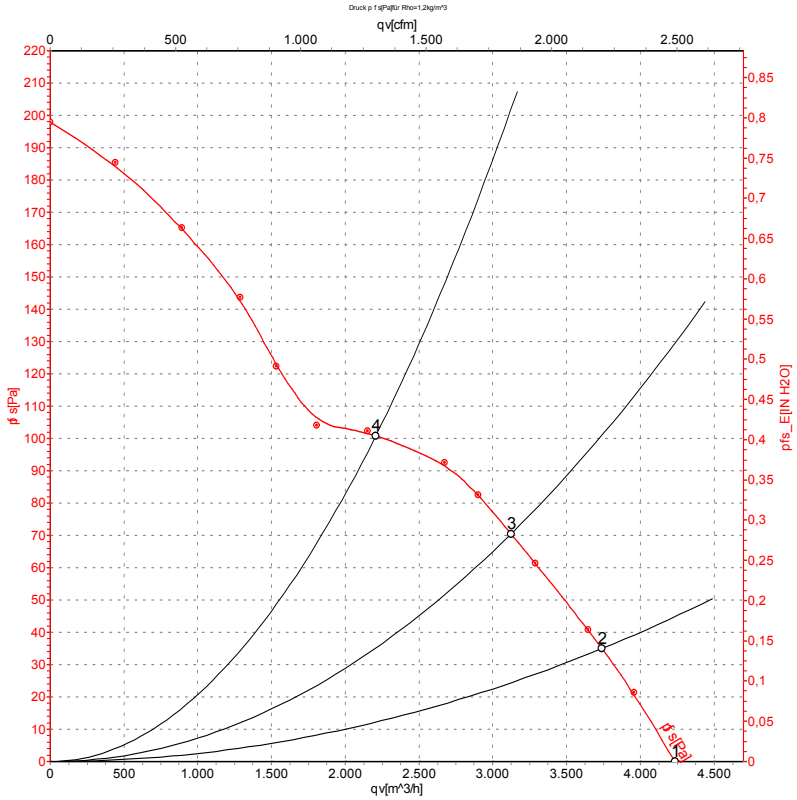

Air performance measured as per ISO 5801 Installation category A. For detailed information on the measuring set-up, please contact ebm-papst. Suction-side noise levels: LwA measured as per ISO 13347 / LpA measured with 1m distance to fan axis. The values given are valid under the measuring conditions mentioned above and may vary according to the actual installation situation. With any deviation from the standard set-up, the specific values have to be checked and reviewed with the unit installed.

Measured values

	U	f	n	P_e	I	LpA_{in}	LwA_{in}	qv	p_{fs}
	V	Hz	min^{-1}	W	A	dB(A)	dB(A)	m^3/h	Pa
1	230	50	1430	160	0.73	67	74	4235	0
2	230	50	1425	180	0.81	67	74	3740	35
3	230	50	1405	198	0.88	65	73	3125	70
4	230	50	1380	219	0.97	67	74	2205	100

U = Supply voltage · f = Frequency · n = Speed · P_e = Power input · I = Current draw · LpA_{in} = Sound pressure level inlet side · LwA_{in} = Sound power level inlet side · qv = Air flow
p_{fs} = Pressure increase

ebm-papst Mulfingen GmbH & Co. KG · Bachmühle 2 · D-74673 Mulfingen · Phone +49 (0) 7938 81-0 · Fax +49 (0) 7938 81-110 · info1@de.ebmpapst.com · www.ebmpapst.com

AC axial fan

sickled blades (S series)

with full round nozzle

Charts: Air flow 60 Hz

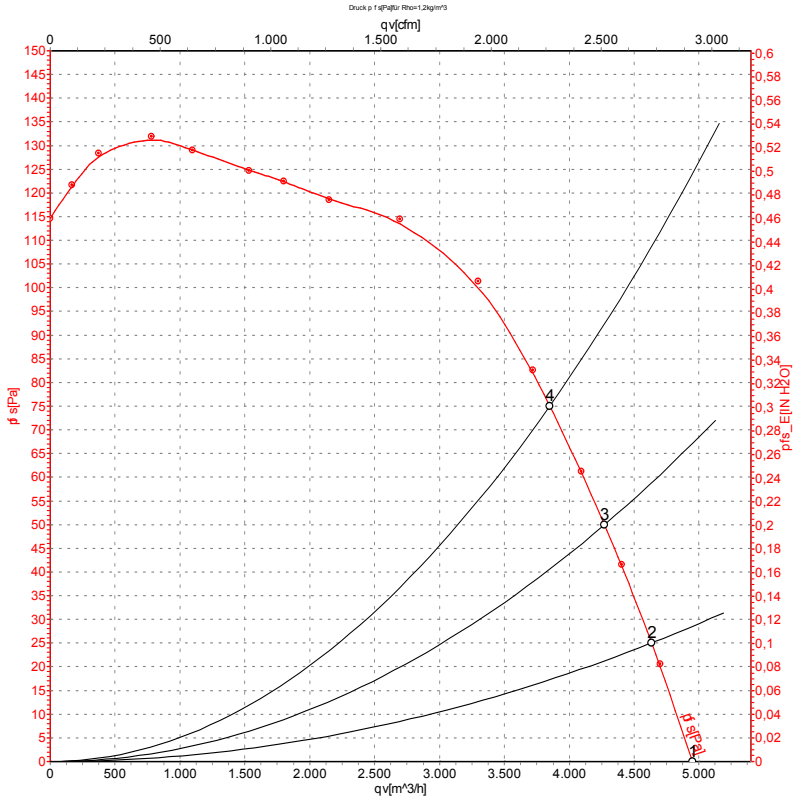

Air performance measured as per ISO 5801 Installation category A. For detailed information on the measuring set-up, please contact ebm-papst. Suction-side noise levels: LwA measured as per ISO 13347 / LpA measured with 1m distance to fan axis. The values given are valid under the measuring conditions mentioned above and may vary according to the actual installation situation. With any deviation from the standard set-up, the specific values have to be checked and reviewed with the unit installed.

Measured values

	U	f	n	P_e	I	LpA_{in}	LwA_{in}	qv	p_{fs}
	V	Hz	min^{-1}	W	A	dB(A)	dB(A)	m^3/h	Pa
1	230	60	1700	240	1.06	71	78	4950	0
2	230	60	1675	255	1.13	71	77	4635	25
3	230	60	1645	271	1.19	70	77	4270	50
4	230	60	1620	286	1.25	70	76	3850	75

U = Supply voltage · f = Frequency · n = Speed · P_e = Power input · I = Current draw · LpA_{in} = Sound pressure level inlet side · LwA_{in} = Sound power level inlet side · qv = Air flow
p_{fs} = Pressure increase

ebm-papst Mulfingen GmbH & Co. KG · Bachmühle 2 · D-74673 Mulfingen · Phone +49 (0) 7938 81-0 · Fax +49 (0) 7938 81-110 · info1@de.ebmpapst.com · www.ebmpapst.com