W4S250-CH02-01

AC axial fan

sickled blades (S series)

with full round nozzle

ebm-papst Mulfingen GmbH & Co. KG
Bachmühle 2
D-74673 Mulfingen
Phone: +49(0)7938/81-0
Fax: +49(0)7938/81-110
info1@de.ebmpapst.com
www.ebmpapst.com

Nominal data

Type	**W4S250-CH02-01**		
Motor	**M4S068-CF**		
Phase		1~	1~
Nominal voltage	[V]	230	230
Frequency	[Hz]	50	60
Type of data definition		rfa	rfa
Valid for approval / standard		CE	CE
Speed	[min^{-1}]	1390	1600
Power input	[W]	69	63
Current draw	[A]	0.53	0.45
Max. back pressure	[Pa]	80	80
Max. ambient temperature	[°C]	50	65

ml = max. load · me = max. efficiency · rfa = running at free air · cs = customer specs · cu = customer unit
Subject to alterations

AC axial fan

sickled blades (S series)

with full round nozzle

Technical features

Leackage current	< 0.75 mA
Size	250 mm
Operation mode	S1
Direction of rotation	Counter-clockwise, seen on rotor
Mounting position	Shaft horizontal or rotor on bottom; rotor on top on request
Humidity class	F5
Direction of air flow	"V"
Insulation class	"B"
Cable exit	Lateral
Condensate discharge holes	Rotor-side
Bearing motor	Ball bearing
Mass	2.8 kg
Material of blades	Sheet steel, coated in black
Material of guard grille	Steel, phosphated and coated in black plastic
Material of wall ring	Sheet steel, pre-galvanised and coated in black plastic
Motor protection	Thermal overload protector (TOP) wired internally
Product conforming to standard	CE; EN 60335-1
Surface of rotor	Coated in black
Number of blades	7
Type of protection	IP 44
Protection class	I
Max. permissible ambient motor temp. (transp./ storage)	+ 80 °C
Min. permissible ambient motor temp. (transp./storage)	- 40 °C
Approval	CCC

ebm-papst Mulfingen GmbH & Co. KG · Bachmühle 2 · D-74673 Mulfingen · Phone: +49(0)7938/81-0 · Fax: +49(0)7938/81-110 · info1@de.ebmpapst.com · www.ebmpapst.com

AC axial fan

sickled blades (S series)

with full round nozzle

Product drawing

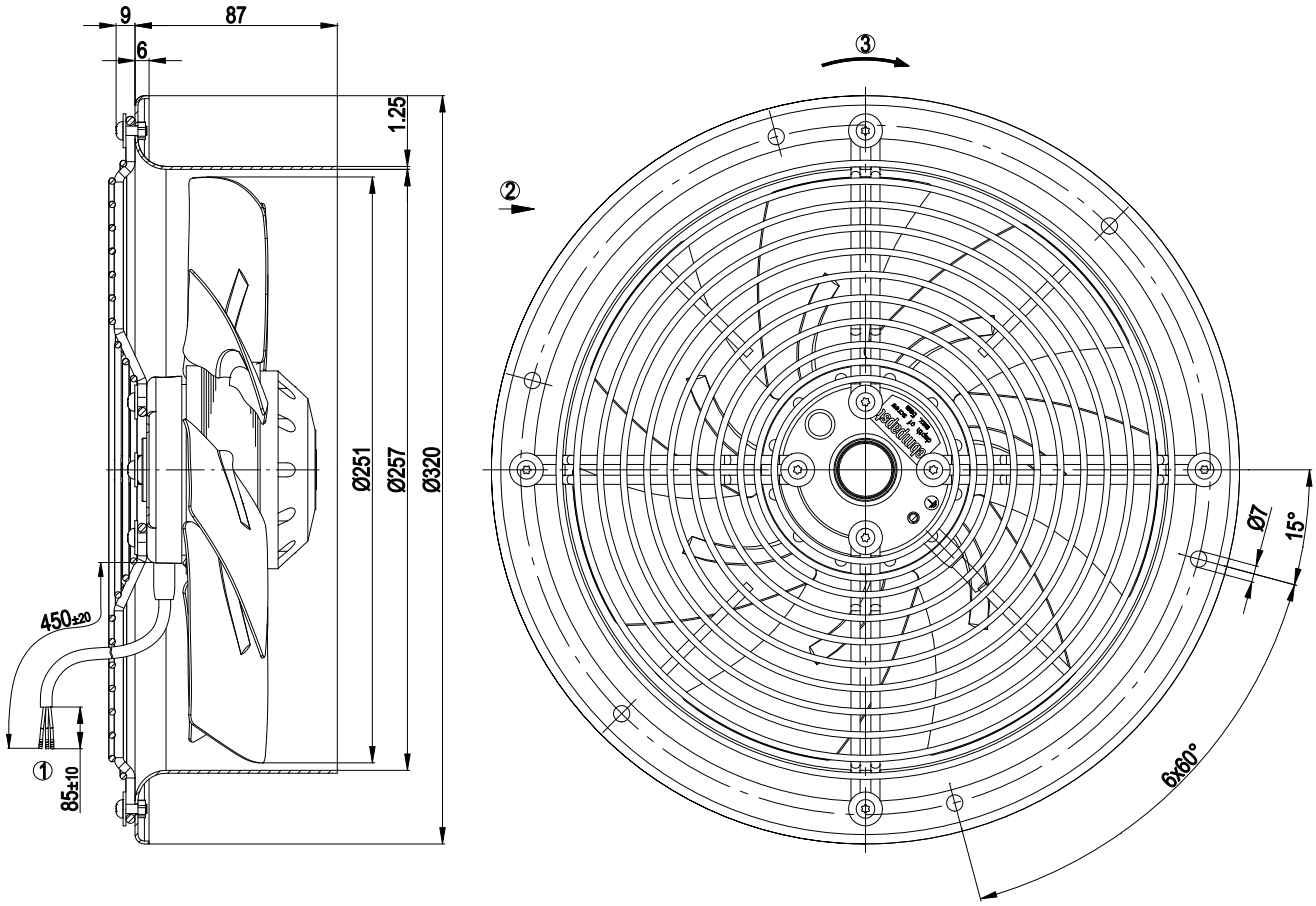

1	Connection line PVC, 3x brass lead tips crimped
2	Direction of air flow "V"
3	Direction of rotation counter-clockwise, seen on rotor

ebm-papst Mulfingen GmbH & Co. KG · Bachmühle 2 · D-74673 Mulfingen · Phone: +49(0)7938/81-0 · Fax: +49(0)7938/81-110 · info1@de.ebmpapst.com · www.ebmpapst.com

AC axial fan

sickled blades (S series)

with full round nozzle

Connection screen

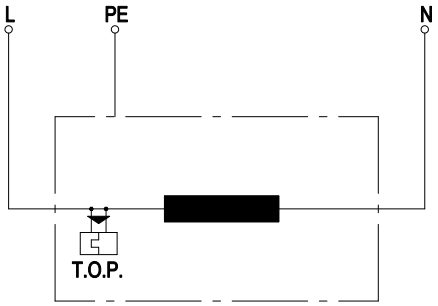

Note: Direction of rotation changes when two phases are reversed

L	= blue
PE	= green / yellow
N	= black
TOP	= temperature controller

ebm-papst Mulfingen GmbH & Co. KG · Bachmühle 2 · D-74673 Mulfingen · Phone: +49(0)7938/81-0 · Fax: +49(0)7938/81-110 · info1@de.ebmpapst.com · www.ebmpapst.com

AC axial fan

sickled blades (S series)

with full round nozzle

Charts: Air flow 50 Hz

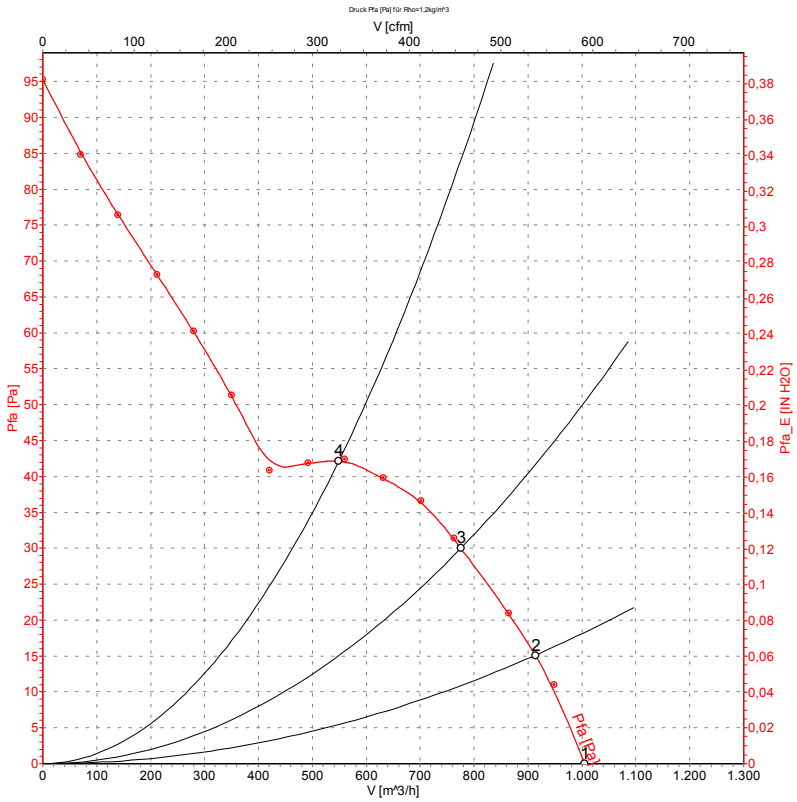

Measurement: LU-59968

Measured values

	U	f	n	P_1	I	$\dot{V}$	p_{fa}
	[V]	[Hz]	[min^{-1}]	[W]	[A]	[m^3/h]	[Pa]
1	230	50	1390	69	0.53	1005	0
2	230	50	1380	71	0.53	915	15
3	230	50	1365	73	0.53	775	30
4	230	50	1360	73	0.53	550	42

ebm-papst Mulfingen GmbH & Co. KG · Bachmühle 2 · D-74673 Mulfingen · Phone: +49(0)7938/81-0 · Fax: +49(0)7938/81-110 · info1@de.ebmpapst.com · www.ebmpapst.com

AC axial fan

sickled blades (S series)

with full round nozzle

Charts: Air flow 60 Hz

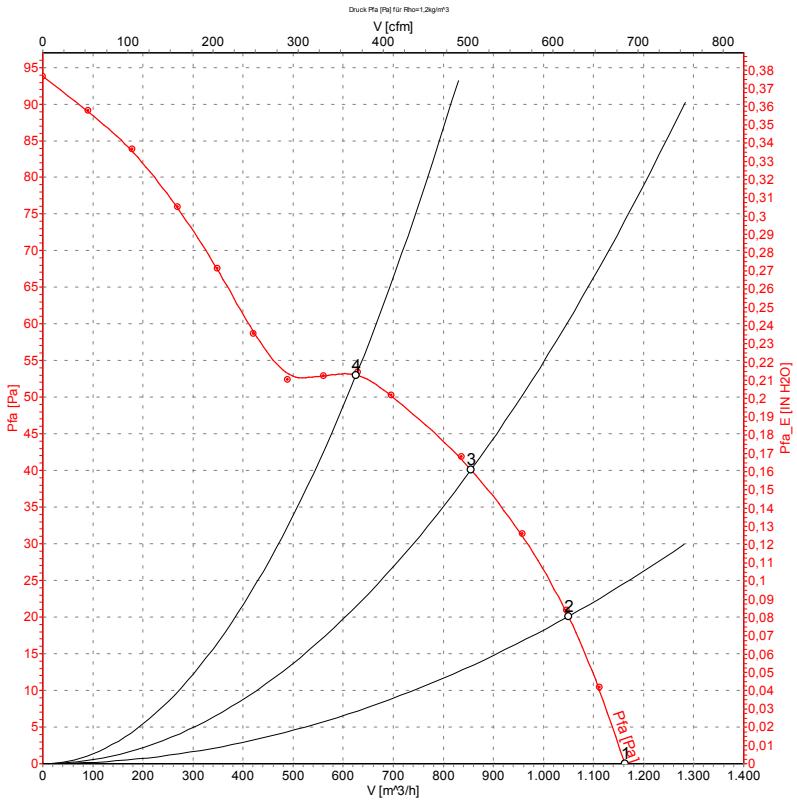

Measurement: LU-59969

Measured values

	U	f	n	P_1	I	$\dot{V}$	p_{fa}
	[V]	[Hz]	[min^{-1}]	[W]	[A]	[m^3/h]	[Pa]
1	230	60	1600	63	0.45	1165	0
2	230	60	1580	65	0.45	1050	20
3	230	60	1545	69	0.47	855	40
4	230	60	1525	71	0.48	625	53

ebm-papst Mulfingen GmbH & Co. KG · Bachmühle 2 · D-74673 Mulfingen · Phone: +49(0)7938/81-0 · Fax: +49(0)7938/81-110 · info1@de.ebmpapst.com · www.ebmpapst.com