W6D630-GN01-01

AC axial fan - HyBlade®

sickled blades (S series)

with full square nozzle

ebm-papst Mulfingen GmbH & Co. KG
Bachmühle 2
74673 Mulfingen
Phone: +49 7938 81-0
Fax: +49 7938 81-110
www.ebmpapst.com
info1@de.ebmpapst.com

Nominal data

Type	**W6D630-GN01-01**
Motor	**M6D110-GF**

Phase		3~	3~	3~	3~	3~	3~
Nominal voltage	[V]	400	400	400	400	480	480
Connection		**D**	Y	**D**	Y	**D**	Y
Frequency	[Hz]	50	50	60	60	60	60
Type of data definition		ml	ml	ml	ml	ml	ml
Valid for approval / standard		CE	CE	CE	CE	CE	CE
Speed	[min^{-1}]	890	690	1010	700	1070	820
Power input	[W]	600	400	730	430	810	550
Current draw	[A]	1.2	0.68	1.29	0.8	1.35	0.8
Max. back pressure	[Pa]	105	56	50	26	55	35
Max. ambient temperature	[°C]	65	65	60	60	55	55

ml = max. load · me = max. efficiency · rfa = running at free air · cs = customer specs · cu = customer unit
Subject to alterations

AC axial fan - HyBlade®

sickled blades (S series)

with full square nozzle

Technical features

Leackage current	<= 3,5 mA
Size	630 mm
Operation mode	S1
Direction of rotation	Counter-clockwise, seen on rotor
Mounting position	Shaft horizontal or rotor on bottom; rotor on top on request
Electrical leads	Via terminal box
Humidity class	F4-1
Direction of air flow	"V"
Insulation class	"F"
Cable exit	Axial
Condensate discharge holes	Rotor-side
Bearing motor	Ball bearing
Mass	27.4 kg
Material of terminal box	ABS plastic, black
Material of blades	Press-fitted sheet steel blank, sprayed with PP plastic
Material of guard grille	Steel, phosphated and coated in black plastic
Material of wall ring	Sheet steel, pre-galvanised and coated in black plastic
Motor protection	Thermal overload protector (TOP) brought out
Product conforming to standard	CE; EN 61800-5-1
Surface of rotor	Coated in black
Number of blades	5
Type of protection	IP 54
Protection class	I
Max. permissible ambient motor temp. (transp./ storage)	+ 80 °C
Min. permissible ambient motor temp. (transp./storage)	- 40 °C
Approval	GOST; VDE

ebm-papst Mulfingen GmbH & Co. KG · Bachmühle 2 · 74673 Mulfingen · Phone: +49 7938 81-0 · Fax: +49 7938 81-110 · www.ebmpapst.com · info1@de.ebmpapst.com

AC axial fan - HyBlade®

sickled blades (S series)

with full square nozzle

Product drawing

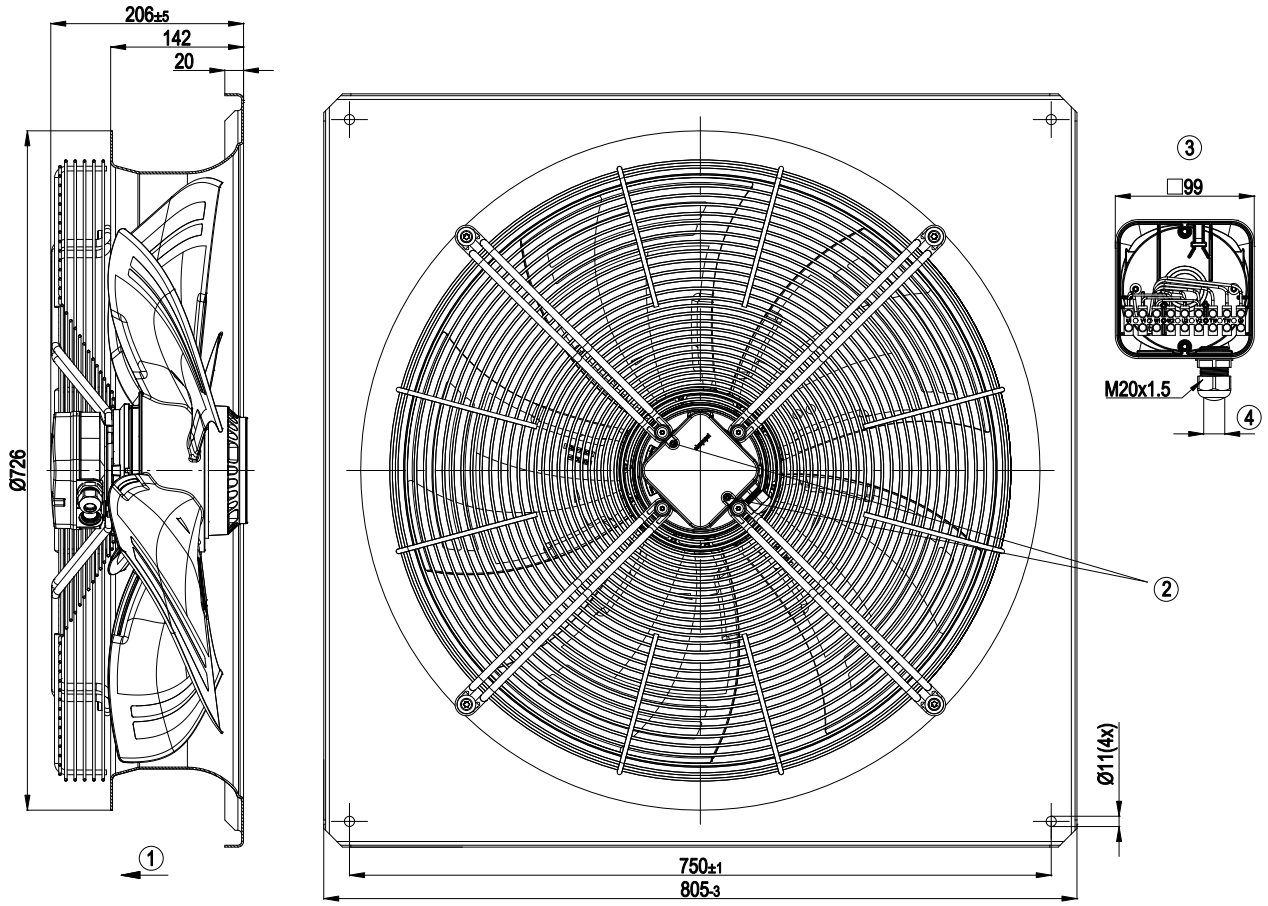

1	Direction of air flow "V"
2	Tightening torque 0.8±0.15 Nm
3	Illustration without terminal box cover
4	Cable diameter: min. 6 mm, max. 12 mm; tightening torque: 2±0.3 Nm

ebm-papst Mulfingen GmbH & Co. KG · Bachmühle 2 · 74673 Mulfingen · Phone: +49 7938 81-0 · Fax: +49 7938 81-110 · www.ebmpapst.com · info1@de.ebmpapst.com

AC axial fan - HyBlade®

sickled blades (S series)

with full square nozzle

Connection screen

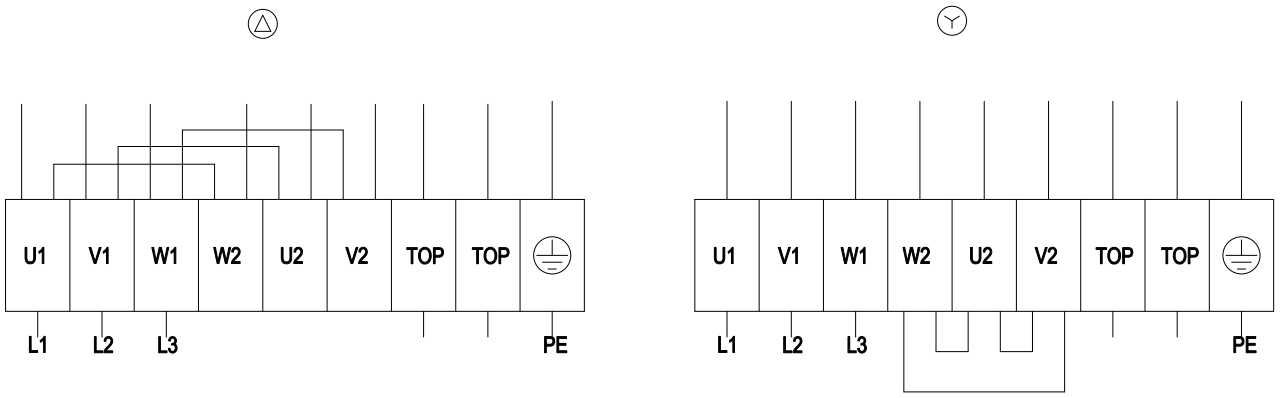

Note: Direction of rotation changes when two phases are reversed

Δ	Delta-connection	Y	Star connection	L1	= U1 = black
L2	= V1 = blue	L3	= W1 = brown	W2	yellow
U2	green	V2	white	TOP	2 x grey
PE	green / yellow				

ebm-papst Mulfingen GmbH & Co. KG · Bachmühle 2 · 74673 Mulfingen · Phone: +49 7938 81-0 · Fax: +49 7938 81-110 · www.ebmpapst.com · info1@de.ebmpapst.com

AC axial fan - HyBlade®

sickled blades (S series)

with full square nozzle

Charts: Air flow 50 Hz

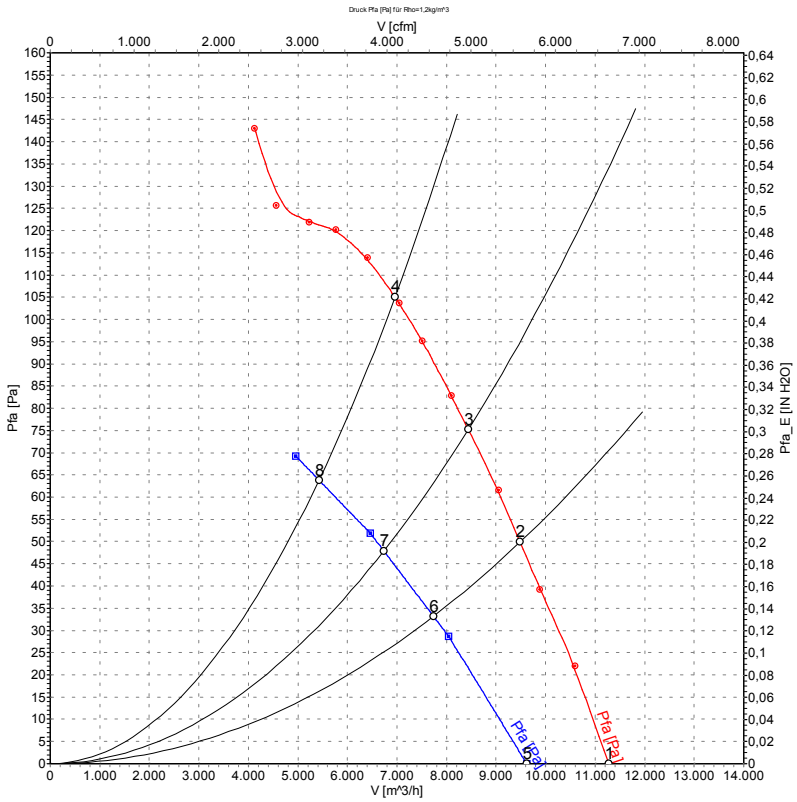

Measurement: LU-105365
Measurement: LU-107570

Measured values

	Conn.	U	f	n	P_1	I	LpA_{ss}	LpA_{ds}	LwA_{ss}	LwA_{ds}	$\dot{V}$	p_{fa}
		[V]	[Hz]	[min^{-1}]	[W]	[A]	[dB(A)]	[dB(A)]	[dB(A)]	[dB(A)]	[m^3/h]	[Pa]
1	Δ	400	50	930	439	1.07	64	55	70	69	11270	0
2	Δ	400	50	905	530	1.15	59	50	66	65	9485	50
3	Δ	400	50	895	571	1.19	59	49	65	64	8440	75
4	Δ	400	50	890	600	1.20	60	51	67	66	6960	105
5	Y	400	50	790	319	0.56	59	50	65	65	9620	0
6	Y	400	50	730	364	0.63	55	45	61	60	7735	33
7	Y	400	50	705	383	0.66	54	43	60	59	6735	48
8	Y	400	50	690	400	0.68	55	46	61	61	5425	64

ebm-papst Mulfingen GmbH & Co. KG · Bachmühle 2 · 74673 Mulfingen · Phone: +49 7938 81-0 · Fax: +49 7938 81-110 · www.ebmpapst.com · info1@de.ebmpapst.com