W6D800-GA01-01

AC axial fan - HyBlade®

sickled blades (S series)

with full square nozzle

ebm-papst Mulfingen GmbH & Co. KG
Bachmühle 2 · D-74673 Mulfingen
Phone +49 7938 81-0
Fax +49 7938 81-110
info1@de.ebmpapst.com
www.ebmpapst.com

Limited partnership · Headquarters Mulfingen
County court Stuttgart · HRA 590344

General partner Elektrobau Mulfingen GmbH · Headquarters Mulfingen
County court Stuttgart · HRB 590142

ErP2015 EXCEEDS THE NORM

Nominal data

Type	**W6D800-GA01-01**
Motor	**M6D138-NA**

Phase		3~	3~
Nominal voltage	VAC	400	400
Connection		Δ	Y
Frequency	Hz	50	50
Type of data definition		ml	ml
Valid for approval / standard		CE	CE
Speed	min^{-1}	915	750
Power input	W	2090	1490
Current draw	A	4.6	2.72
Max. back pressure	Pa	175	115
Min. ambient temperature	°C	-40	-40
Max. ambient temperature	°C	65	65
Starting current	A	18	6

ml = Max. load · me = Max. efficiency · fa = Running at free air · cs = Customer specs · cu = Customer unit
Subject to alterations

Data according to ErP directive

Installation category	A
Efficiency category	Static
Variable speed drive	No
Specific ratio*	1.00

* Specific ratio = 1 + p_{fs} / 100 000 Pa

		Actual	Request 2013	Request 2015
Overall efficiency η_{es}	%	35.4	31.4	35.4
Efficiency grade N		40	36	40
Power input P_e	kW	1.85		
Air flow q_v	m^3/h	17830		
Pressure increase p_{fs}	Pa	130		
Speed n	min^{-1}	930		

Data definition with optimum efficiency. LU-124239
The ErP data is determined using a motor-impeller combination in a standardised measurement configuration.

AC axial fan - HyBlade®

sickled blades (S series)

with full square nozzle

Technical features

Mass	46.8 kg
Size	800 mm
Surface of rotor	Cast in aluminium
Material of terminal box	PP plastic
Material of blades	Aluminium sheet insert, sprayed with PP plastic
Material of wall ring	Sheet steel, pre-galvanised and coated in black plastic
Material of guard grille	Steel, phosphated and coated in black plastic
Number of blades	5
Blade angle	0°
Direction of air flow	"V"
Direction of rotation	Clockwise, seen on rotor
Type of protection	IP 54
Insulation class	"F"
Humidity class	F3-1
Max. permissible ambient motor temp. (transp./ storage)	+80 °C
Min. permissible ambient motor temp. (transp./storage)	-40 °C
Mounting position	Any
Condensate discharge holes	On rotor and stator sides
Operation mode	S1
Motor bearing	Ball bearing
Touch current acc. IEC 60990 (measuring network Fig. 4, TN system)	<= 3.5 mA
Electrical leads	Via terminal box
Motor protection	Thermal overload protector (TOP) brought out
Cable exit	Axial
Protection class	I (if protective earth is connected by customer)
Product conforming to standard	EN 60034-1 (2010); EN 61800-5-1; CE
Approval	EAC; VDE

ebm-papst Mulfingen GmbH & Co. KG · Bachmühle 2 · D-74673 Mulfingen · Phone +49 (0) 7938 81-0 · Fax +49 (0) 7938 81-110 · info1@de.ebmpapst.com · www.ebmpapst.com

AC axial fan - HyBlade®

sickled blades (S series)

with full square nozzle

Product drawing

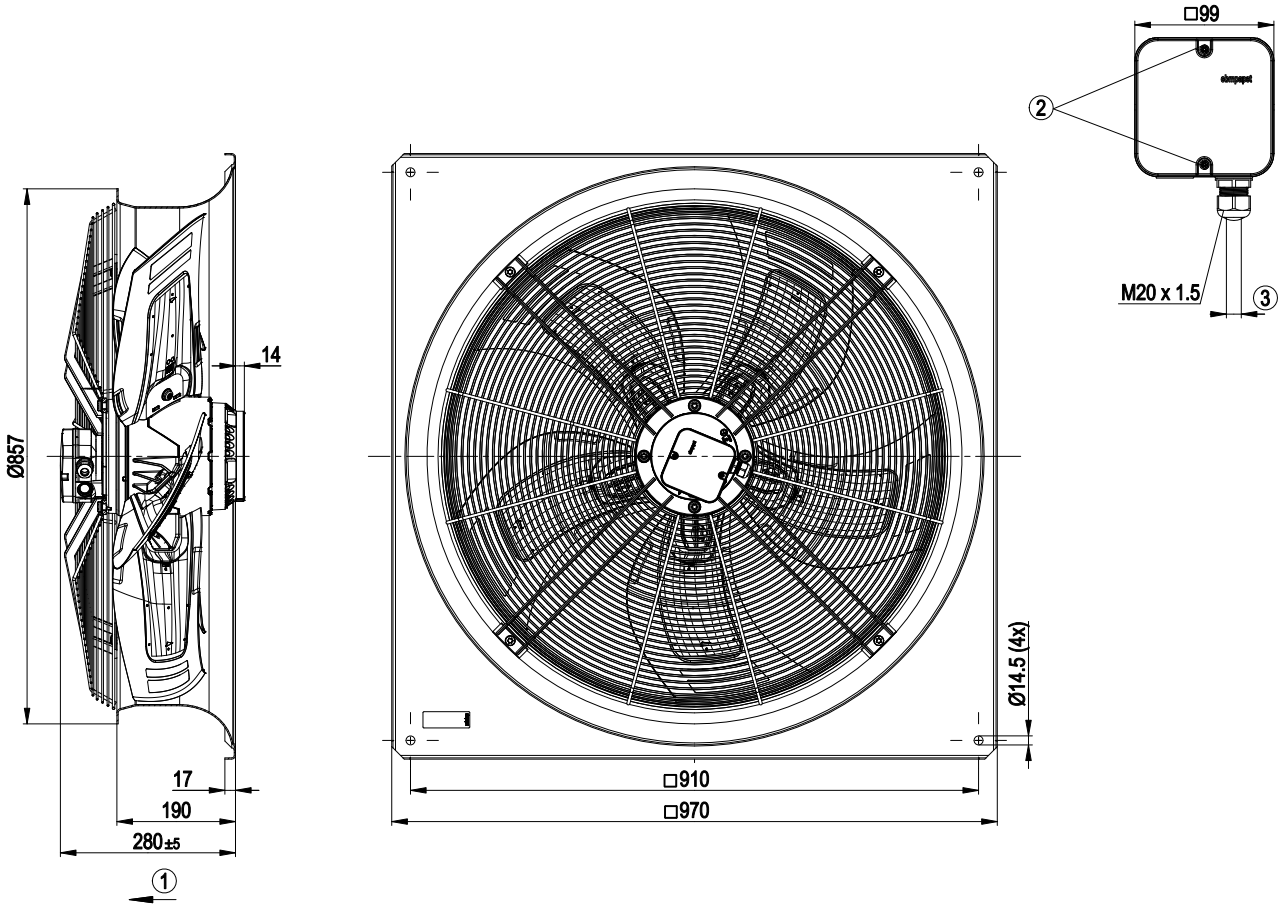

1	Direction of air flow "V"
2	Tightening torque 1.5±0.2 Nm
3	Cable diameter: min. 7 mm, max. 14 mm, tightening torque: 2±0.3 Nm

ebm-papst Mulfingen GmbH & Co. KG · Bachmühle 2 · D-74673 Mulfingen · Phone +49 (0) 7938 81-0 · Fax +49 (0) 7938 81-110 · info1@de.ebmpapst.com · www.ebmpapst.com

AC axial fan - HyBlade®

sickled blades (S series)

with full square nozzle

Connection screen

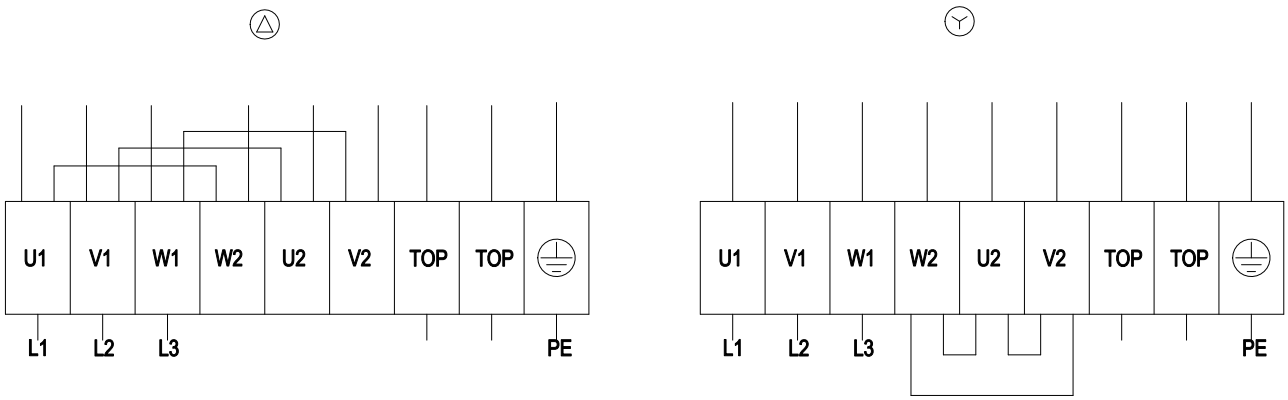

Δ	Delta connection	Y	Star connection	L1	= U1 = black
L2	= V1 = blue	L3	= W1 = brown	W2	yellow
U2	green	V2	white	TOP	2 x grey
PE	green/yellow				

ebm-papst Mulfingen GmbH & Co. KG · Bachmühle 2 · D-74673 Mulfingen · Phone +49 (0) 7938 81-0 · Fax +49 (0) 7938 81-110 · info1@de.ebmpapst.com · www.ebmpapst.com

AC axial fan - HyBlade®

sickled blades (S series)

with full square nozzle

Charts: Air flow 50 Hz

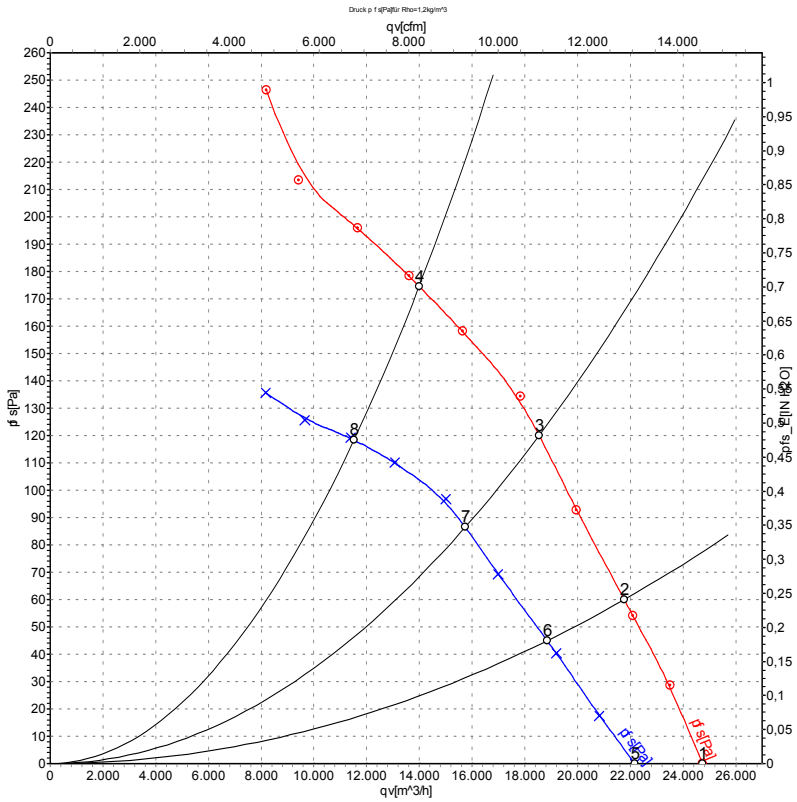

Air performance measured as per ISO 5801 Installation category A. For detailed information on the measuring set-up, please contact ebm-papst. Suction-side noise levels: LwA measured as per ISO 13347 / LpA measured with 1m distance to fan axis. The values given are valid under the measuring conditions mentioned above and may vary according to the actual installation situation. With any deviation from the standard set-up, the specific values have to be checked and reviewed with the unit installed.

Measured values

	Conn.	U	f	n	P_e	I	LpA_{in}	LwA_{in}	LwA_{out}	qv	p_{fs}
		V	Hz	min^{-1}	W	A	dB(A)	dB(A)	dB(A)	m^3/h	Pa
1	Δ	400	50	950	1475	3.99	66	73	73	24730	0
2	Δ	400	50	940	1668	4.14	66	72	72	21770	60
3	Δ	400	50	930	1829	4.28	67	74	73	18550	120
4	Δ	400	50	915	2090	4.60	70	78	77	13990	175
5	Y	400	50	840	1126	2.08	63	70	71	22170	0
6	Y	400	50	815	1256	2.31	62	69	68	18840	45
7	Y	400	50	790	1351	2.47	63	69	69	15740	87
8	Y	400	50	750	1490	2.72	65	73	72	11520	119

Conn. = Connection · U = Supply voltage · f = Frequency · n = Speed · P_e = Power input · I = Current draw · LpA_{in} = Sound pressure level inlet side · LwA_{in} = Sound power level inlet side
LwA_{out} = Sound power level outlet side · qv = Air flow · p_{fs} = Pressure increase

ebm-papst Mulfingen GmbH & Co. KG · Bachmühle 2 · D-74673 Mulfingen · Phone +49 (0) 7938 81-0 · Fax +49 (0) 7938 81-110 · info1@de.ebmpapst.com · www.ebmpapst.com