AC axial fan - HyBlade®

sickled blades (S series)

with full square nozzle

ebm-papst Mulfingen GmbH & Co. KG
Bachmühle 2
74673 Mulfingen
Phone: +49 7938 81-0
Fax: +49 7938 81-110
www.ebmpapst.com
info1@de.ebmpapst.com

Nominal data

Type	**W8D800-GD01-01**
Motor	**M8D138-LA**

Phase		3~	3~	3~	3~
Nominal voltage	[V]	400	400	480	480
Connection		**D**	Y	**D**	Y
Frequency	[Hz]	50	50	60	60
Type of data definition		ml	ml	ml	ml
Valid for approval / standard		CE	CE	CE	CE
Speed	[min^{-1}]	660	485	800	575
Power input	[W]	990	580	1270	740
Current draw	[A]	2.37	1.21	2.52	1.33
Max. back pressure	[Pa]	105	54	65	33
Max. ambient temperature	[°C]	70	70	65	65

ml = max. load · me = max. efficiency · rfa = running at free air · cs = customer specs · cu = customer unit
Subject to alterations

AC axial fan - HyBlade®

sickled blades (S series)

with full square nozzle

Technical features

Leackage current	<= 3,5 mA
Size	800 mm
Operation mode	S1
Direction of rotation	Clockwise, seen on rotor
Mounting position	Shaft horizontal or rotor on bottom; rotor on top on request
Electrical leads	Via terminal box
Humidity class	F3-1
Blade angle	0
Direction of air flow	"V"
Insulation class	"F"
Cable exit	Axial
Condensate discharge holes	Rotor-side
Bearing motor	Ball bearing
Mass	44.2 kg
Material of terminal box	ABS plastic, black
Material of blades	Aluminium sheet insert, sprayed with PP plastic
Material of guard grille	Steel, phosphated and coated in black plastic
Material of wall ring	Sheet steel, pre-galvanised and black plastic-coated
Motor protection	Thermal overload protector (TOP) brought out
Product conforming to standard	CE; EN 61800-5-1
Surface of rotor	Cast in aluminium
Number of blades	5
Type of protection	IP 54
Protection class	I
Max. permissible ambient motor temp. (transp./ storage)	+ 80 °C
Min. permissible ambient motor temp. (transp./storage)	- 40 °C
Approval	VDE

ebm-papst Mulfingen GmbH & Co. KG · Bachmühle 2 · 74673 Mulfingen · Phone: +49 7938 81-0 · Fax: +49 7938 81-110 · www.ebmpapst.com · info1@de.ebmpapst.com

AC axial fan - HyBlade®

sickled blades (S series)

with full square nozzle

Product drawing

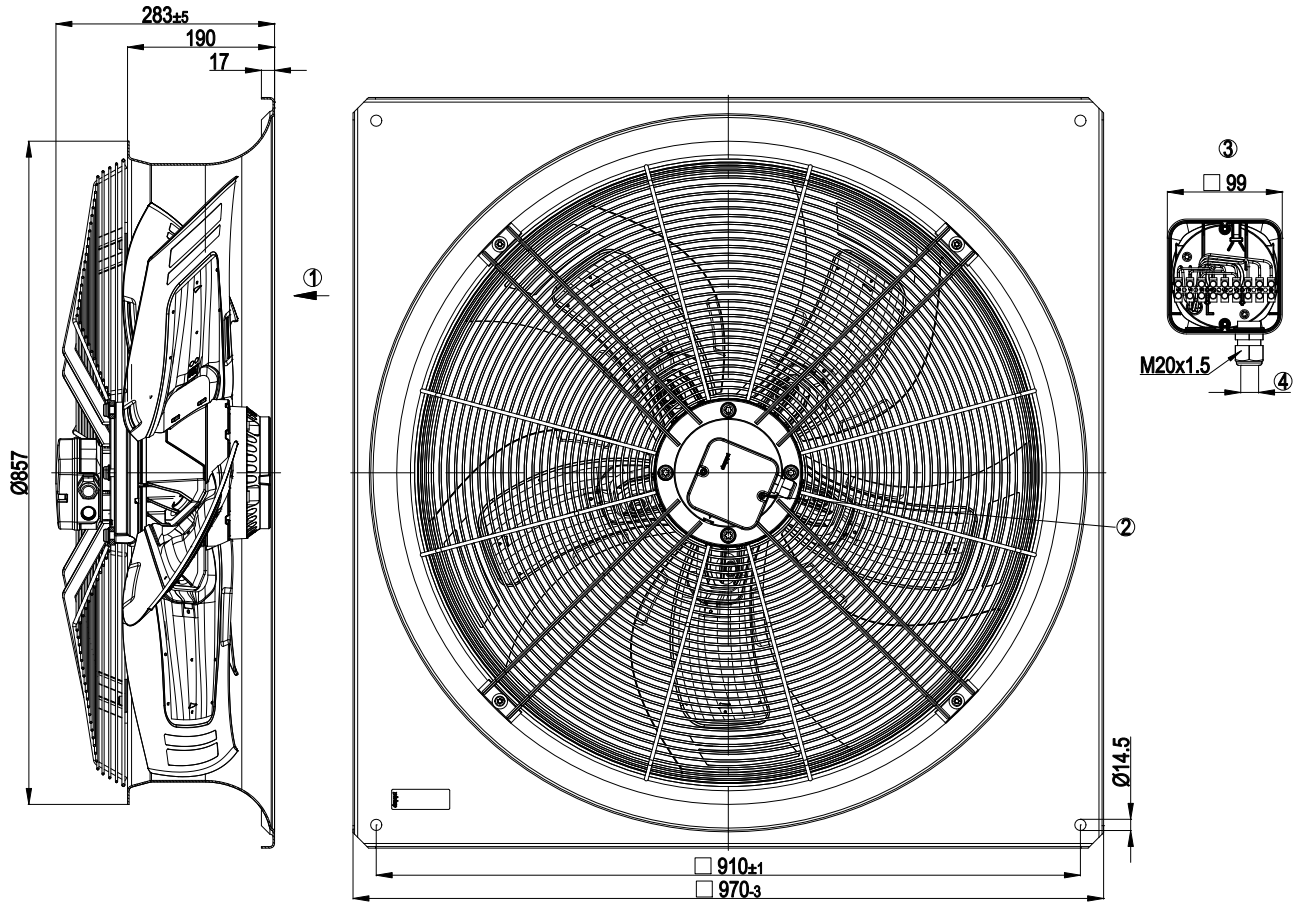

1	Direction of air flow "V"
2	Tightening torque 0.8±0.3 Nm
3	Shown without terminal box cover
4	Cable diameter: min. 7 mm, max. 14 mm, tightening torque: 2±0.15 Nm

ebm-papst Mulfingen GmbH & Co. KG · Bachmühle 2 · 74673 Mulfingen · Phone: +49 7938 81-0 · Fax: +49 7938 81-110 · www.ebmpapst.com · info1@de.ebmpapst.com

AC axial fan - HyBlade®

sickled blades (S series)

with full square nozzle

Connection screen

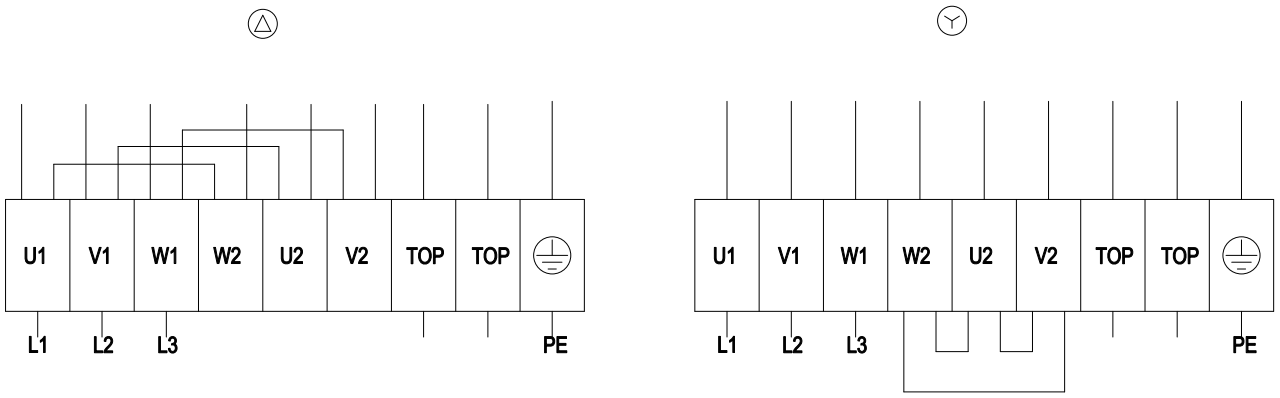

Note: Direction of rotation changes when two phases are reversed

Δ	Delta-connection	Y	Star connection	L1	= U1 = black
L2	= V1 = blue	L3	= W1 = brown	W2	yellow
U2	green	V2	white	TOP	2 x grey
PE	green / yellow				

ebm-papst Mulfingen GmbH & Co. KG · Bachmühle 2 · 74673 Mulfingen · Phone: +49 7938 81-0 · Fax: +49 7938 81-110 · www.ebmpapst.com · info1@de.ebmpapst.com

AC axial fan - HyBlade®

sickled blades (S series)

with full square nozzle

Charts: Air flow 50 Hz

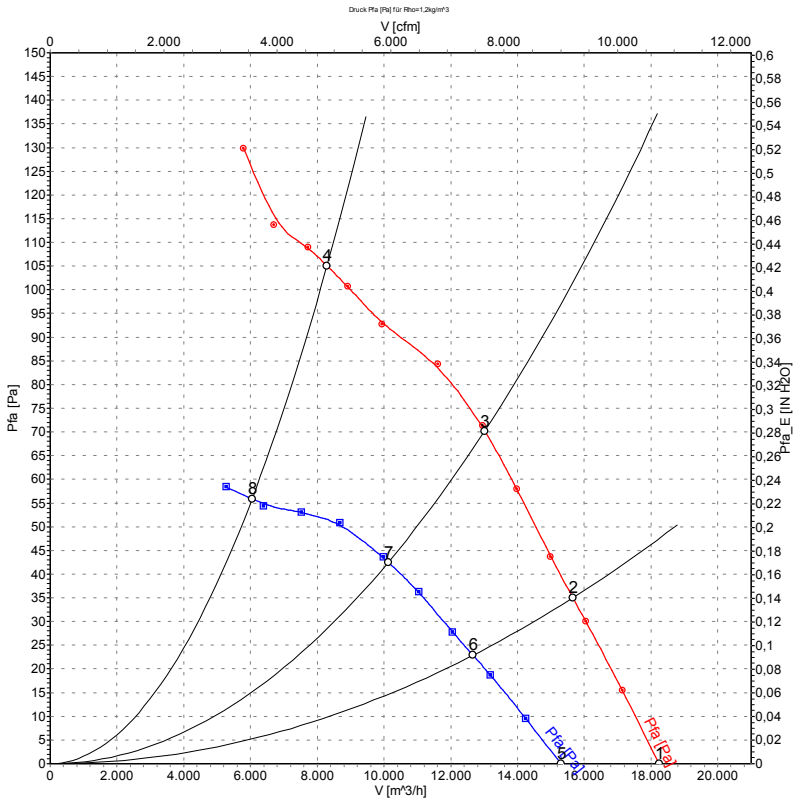

Measurement: LU-115898
Measurement: LU-115925

Measured values

	Conn.	U	f	n	P_1	I	LpA_{ss}	LpA_{ds}	LwA_{ss}	LwA_{ds}	$\mathring{V}$	p_{fa}
		[V]	[Hz]	[min^{-1}]	[W]	[A]	[dB(A)]	[dB(A)]	[dB(A)]	[dB(A)]	[m^3/h]	[Pa]
1	Δ	400	50	700	684	2.05	59	57	65	65	18240	0
2	Δ	400	50	685	771	2.10	59	51	65	64	15660	35
3	Δ	400	50	680	846	2.20	60	50	66	65	13020	70
4	Δ	400	50	660	990	2.37	66	59	74	74	8295	105
5	Y	400	50	585	466	0.98	55	52	61	61	15300	0
6	Y	400	50	555	510	1.07	54	45	60	59	12660	23
7	Y	400	50	530	534	1.12	53	44	60	59	10130	43
8	Y	400	50	485	580	1.21	58	50	66	66	6045	56

ebm-papst Mulfingen GmbH & Co. KG · Bachmühle 2 · 74673 Mulfingen · Phone: +49 7938 81-0 · Fax: +49 7938 81-110 · www.ebmpapst.com · info1@de.ebmpapst.com

AC axial fan - HyBlade®

sickled blades (S series)

with full square nozzle

Charts: Air flow 60 Hz

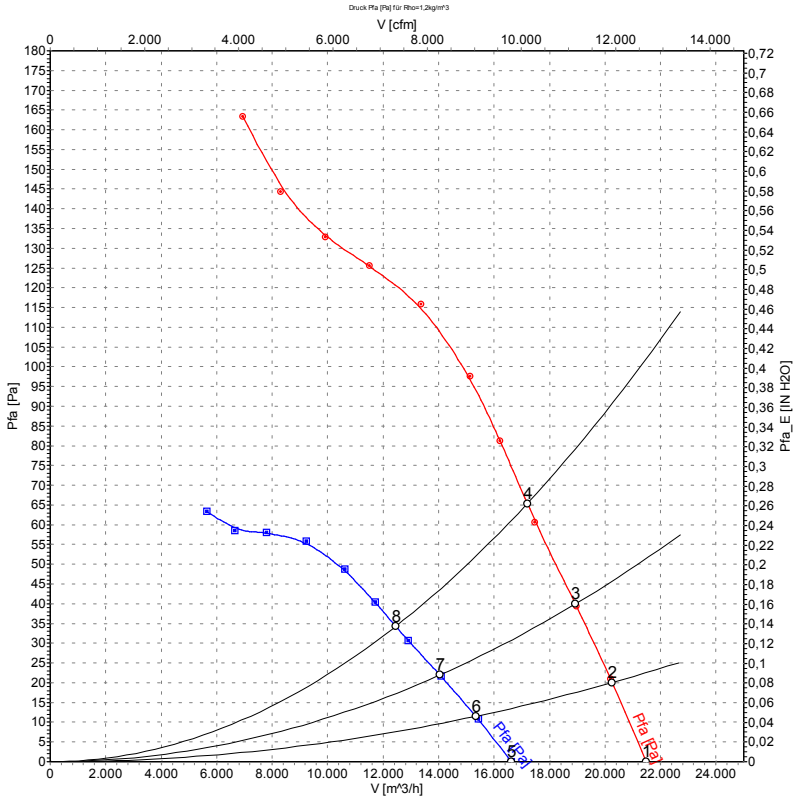

Measurement: LU-115907
Measurement: LU-115926

Measured values

	Conn.	U	f	n	P_1	I	LpA_{ss}	LpA_{ds}	LwA_{ss}	LwA_{ds}	$\dot{V}$	p_{fa}
		[V]	[Hz]	[min^{-1}]	[W]	[A]	[dB(A)]	[dB(A)]	[dB(A)]	[dB(A)]	[m^3/h]	[Pa]
1	Δ	480	60	820	1067	2.29	62	64	69	69	21490	0
2	Δ	480	60	815	1139	2.36	62	59	68	68	20250	20
3	Δ	480	60	810	1195	2.42	62	57	69	68	18930	40
4	Δ	480	60	800	1270	2.52	63	54	69	68	17200	65
5	Y	480	60	640	688	1.22	57	55	63	62	16620	0
6	Y	480	60	615	709	1.26	56	51	62	61	15330	12
7	Y	480	60	600	728	1.29	55	47	62	61	14040	22
8	Y	480	60	575	740	1.33	55	46	62	61	12460	33

ebm-papst Mulfingen GmbH & Co. KG · Bachmühle 2 · 74673 Mulfingen · Phone: +49 7938 81-0 · Fax: +49 7938 81-110 · www.ebmpapst.com · info1@de.ebmpapst.com